Beam Loss Monitors

A Beam Loss Monitor

simplified view

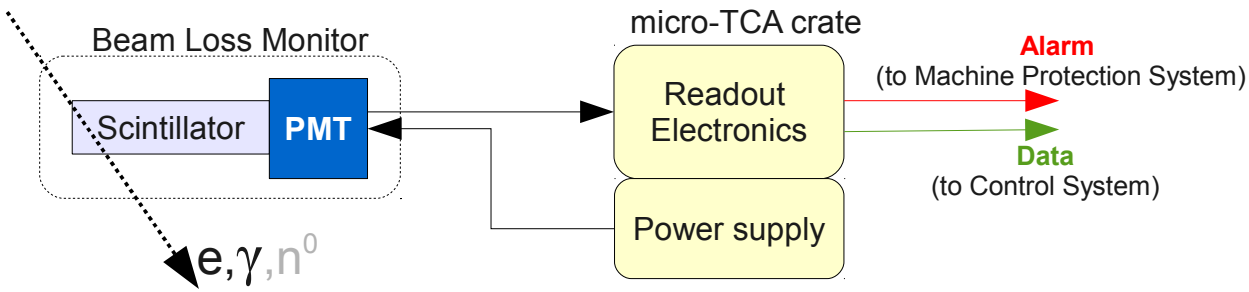

Beam Loss Monitors at FLASH

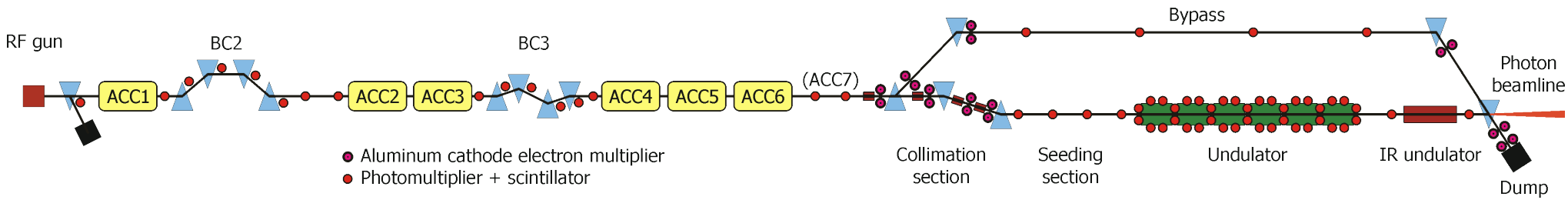

L. Froehlich

As of today 83 BLMs in operation

Beam Loss Monitors at FLASH

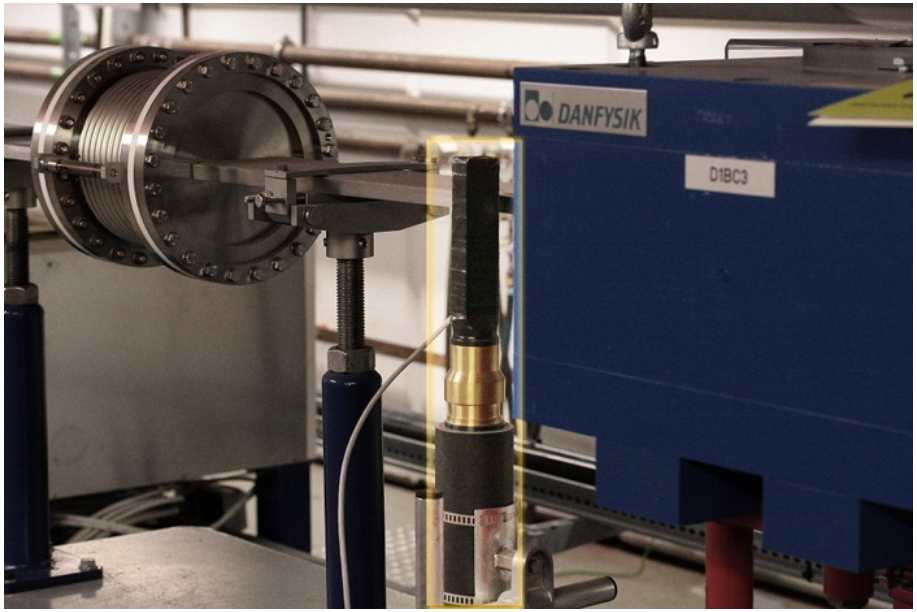

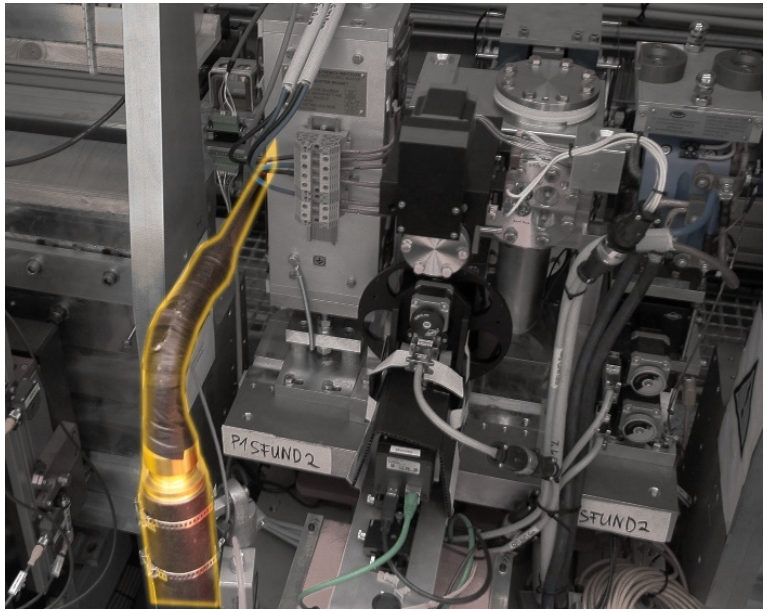

“Small“ scintillators

Beam Loss Monitors at FLASH

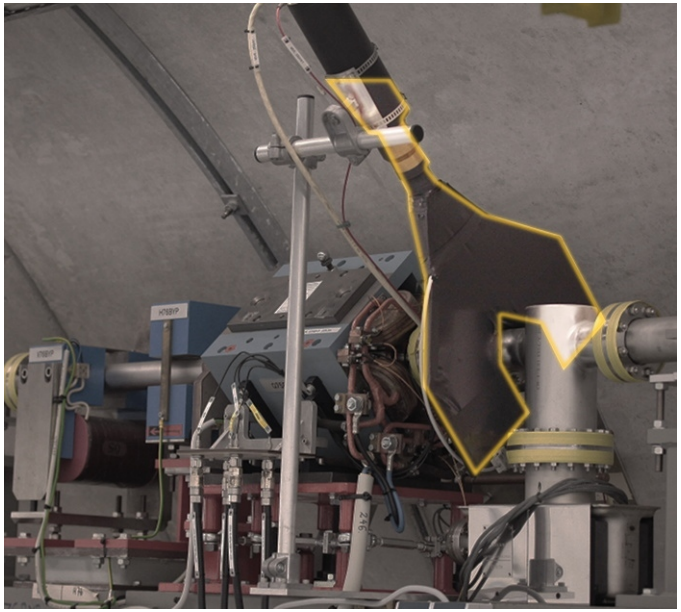

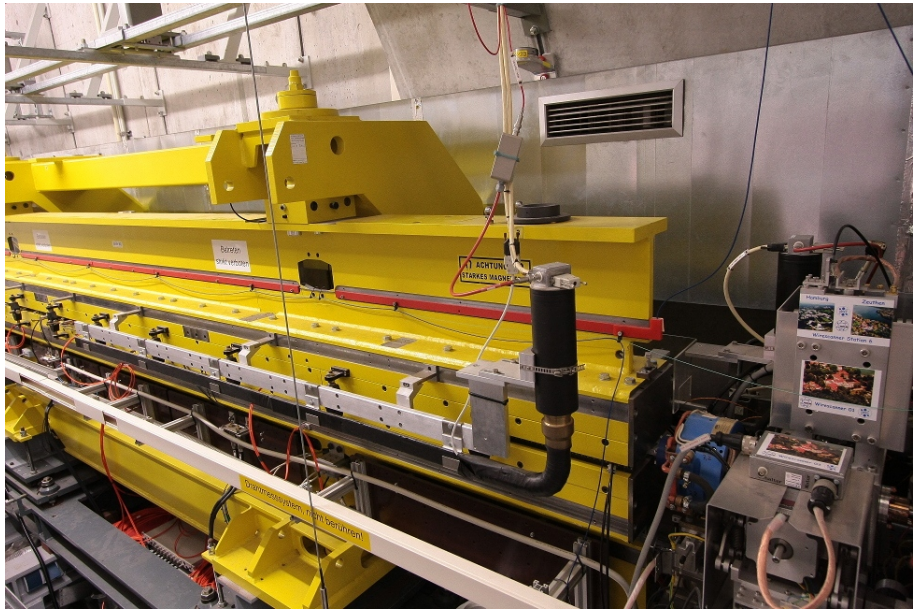

“Large” scintillators

Beam Loss Monitors at FLASH

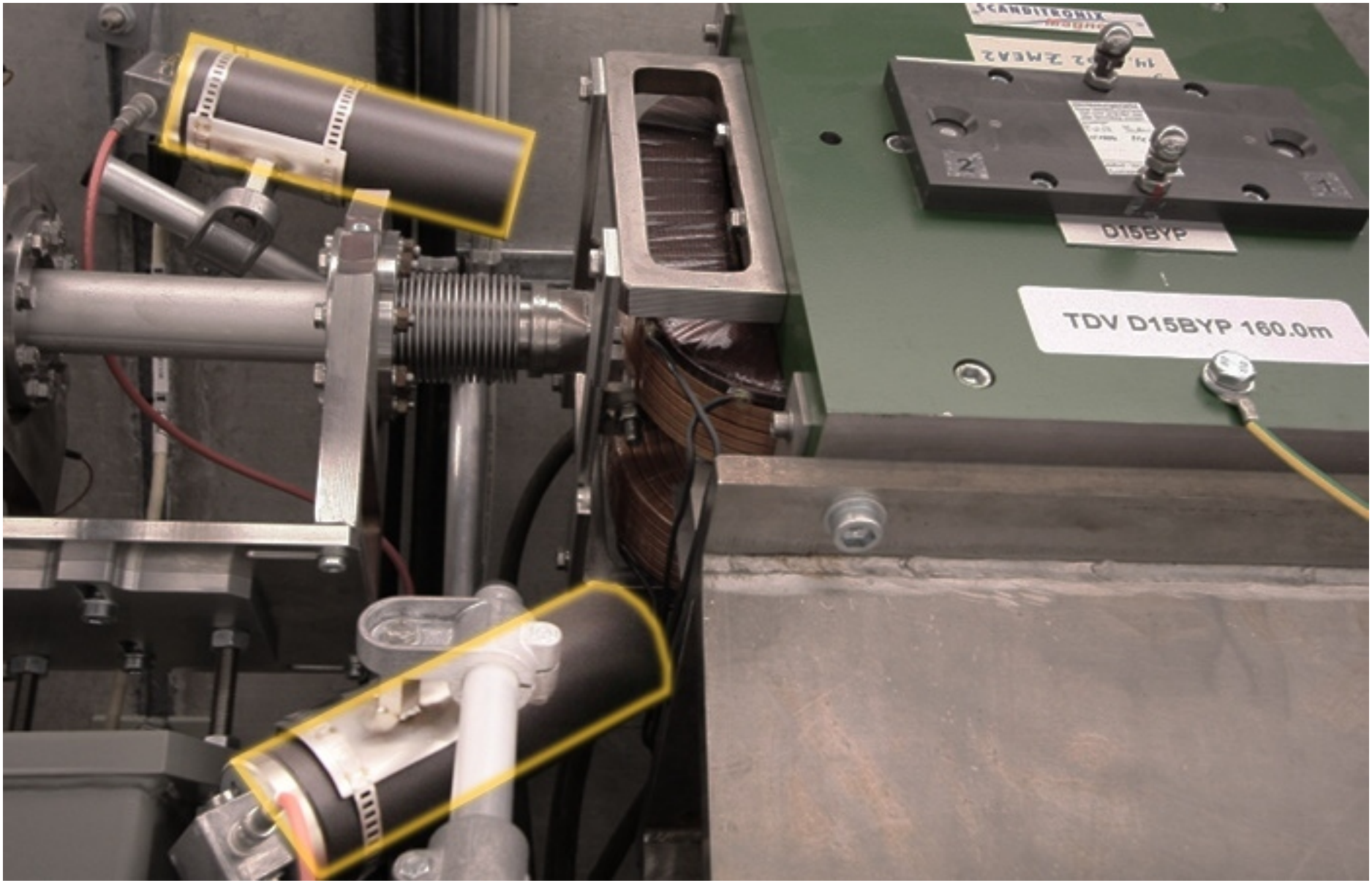

Secondary Emission Monitors (SEM)

Calibration Procedure for the Beam Loss Monitors

07.09.2009 14:14 Baboi **Procedure to commission new BLMs**

[this is based on the procedure used on Fri, Sep. 4, 2009, to commission BLMs 14U, 14R, 14D and 14D.DUMP]
The programs are (mostly) found in DOOCS
-> BLM Overview

1. Set **calibration parameter** to 1
   -> BLM Overview -> Expert tools -> Multiplicator setup
2. Set **HV**
   Dump 0.1nC close to the BLM (look for max. signal on BLM)
   Set HV such that signal-baseline = 0.1 (V)
3. Set **input offsets**
   Linac off (no beam, no RF)
   use automatic program (for all BLMs)
   -> Expert Tools -> Adjust input ofsets
4. Adjust **integrator timing**
   -> /home/ttflinac/user/lfroehli/blm_tools/scan_main_delay.m
5. Adjust **ADC offset**
   Linac off (no beam, no RF)
   -> Expert Tools -> Automatic Setup
  This program also adjust the calibration factors
6. Adjust **thresholds**

Adjust thresholds so that the respective alarm is triggered as follows (see Lars' PhD thesis)
   single threshold: Dump 0.1nC in front of BLM
   multi threshold: 10 bunches triggger an alarm(?)
   integration alarm: 10 bunches of max.charge (e.g. 3nC)

Beam Loss Monitors at FLASH

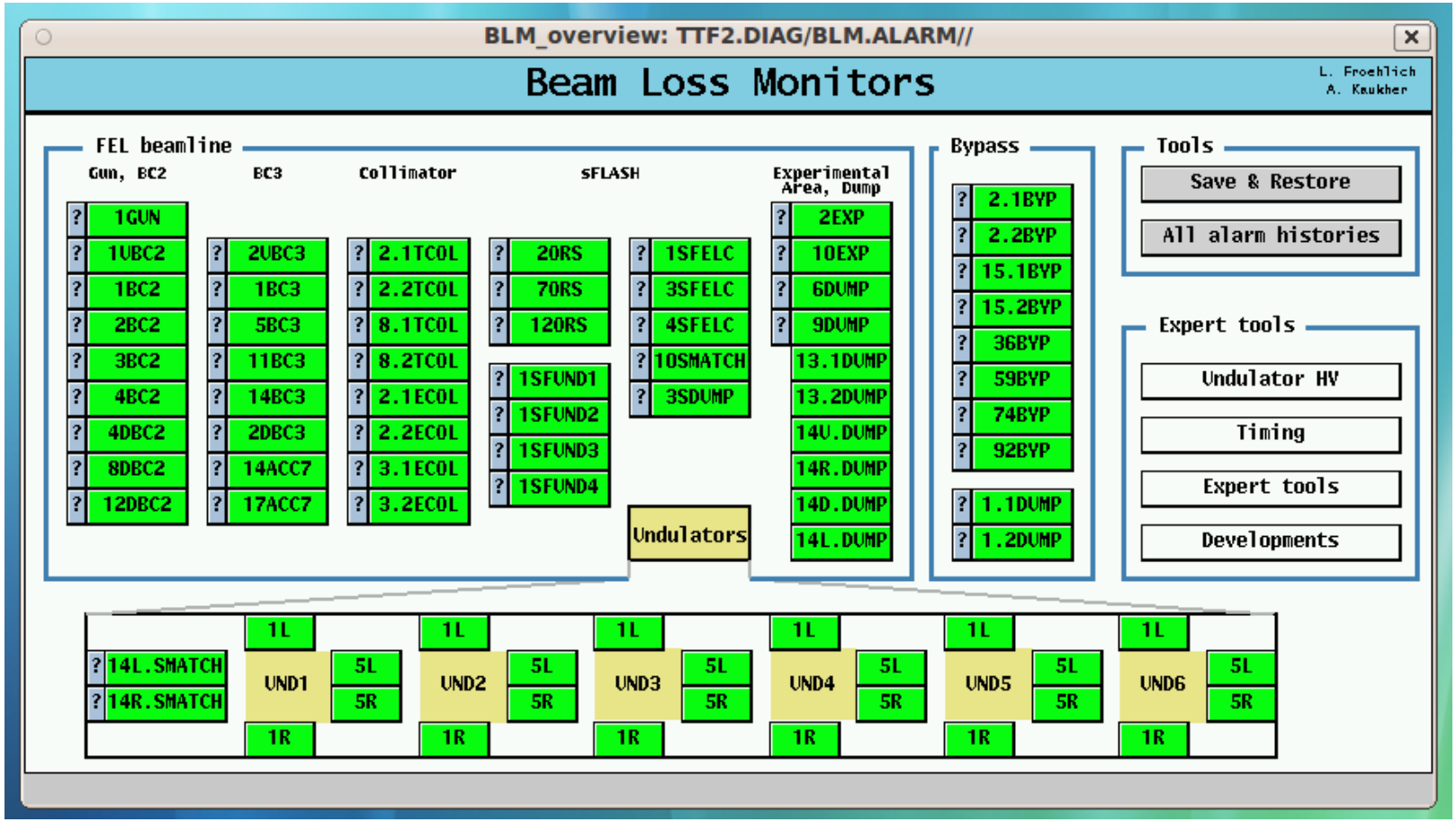

normally...

Beam Loss Monitors at FLASH

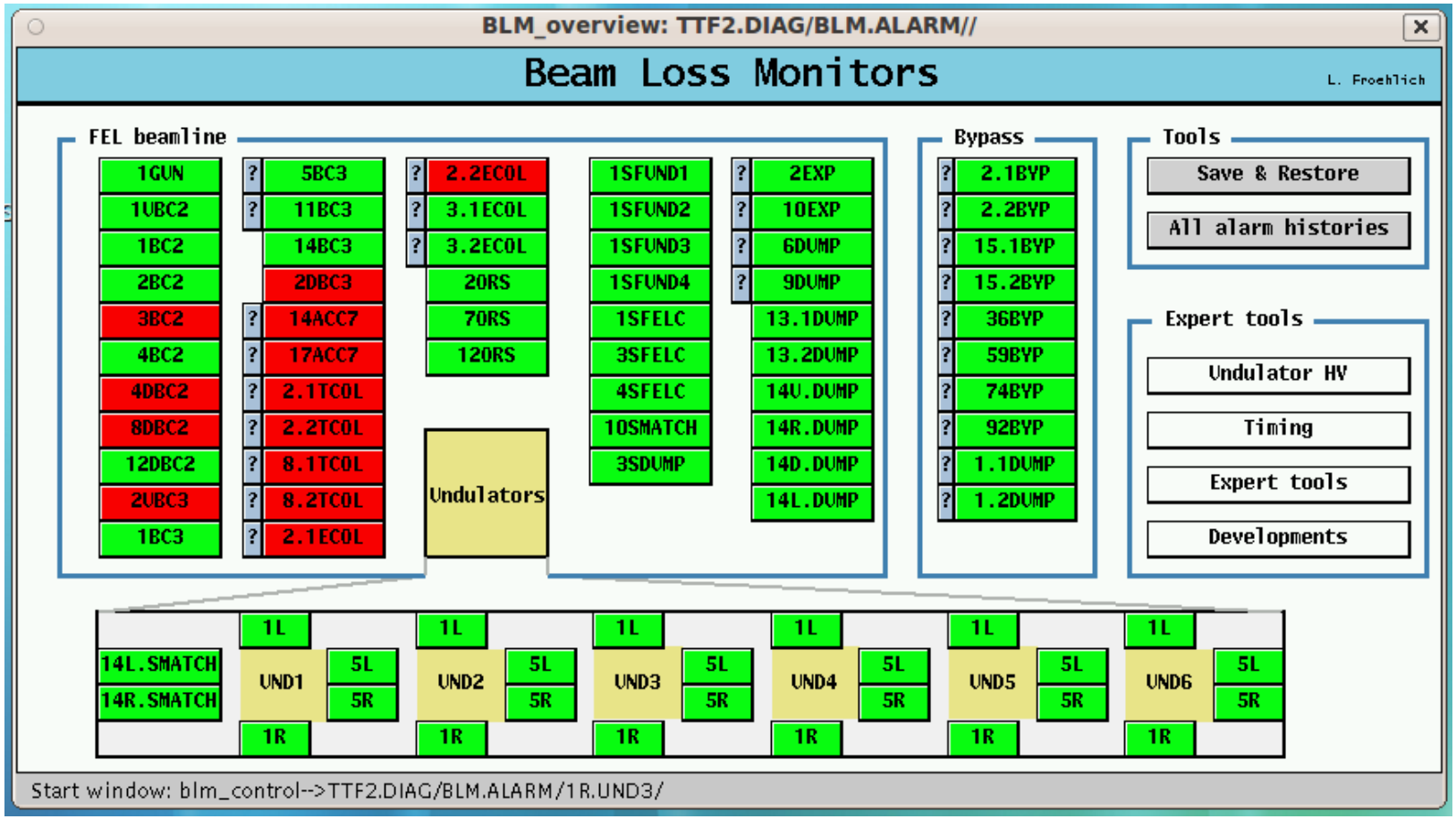

sometimes...

Beam Loss Monitors at FLASH

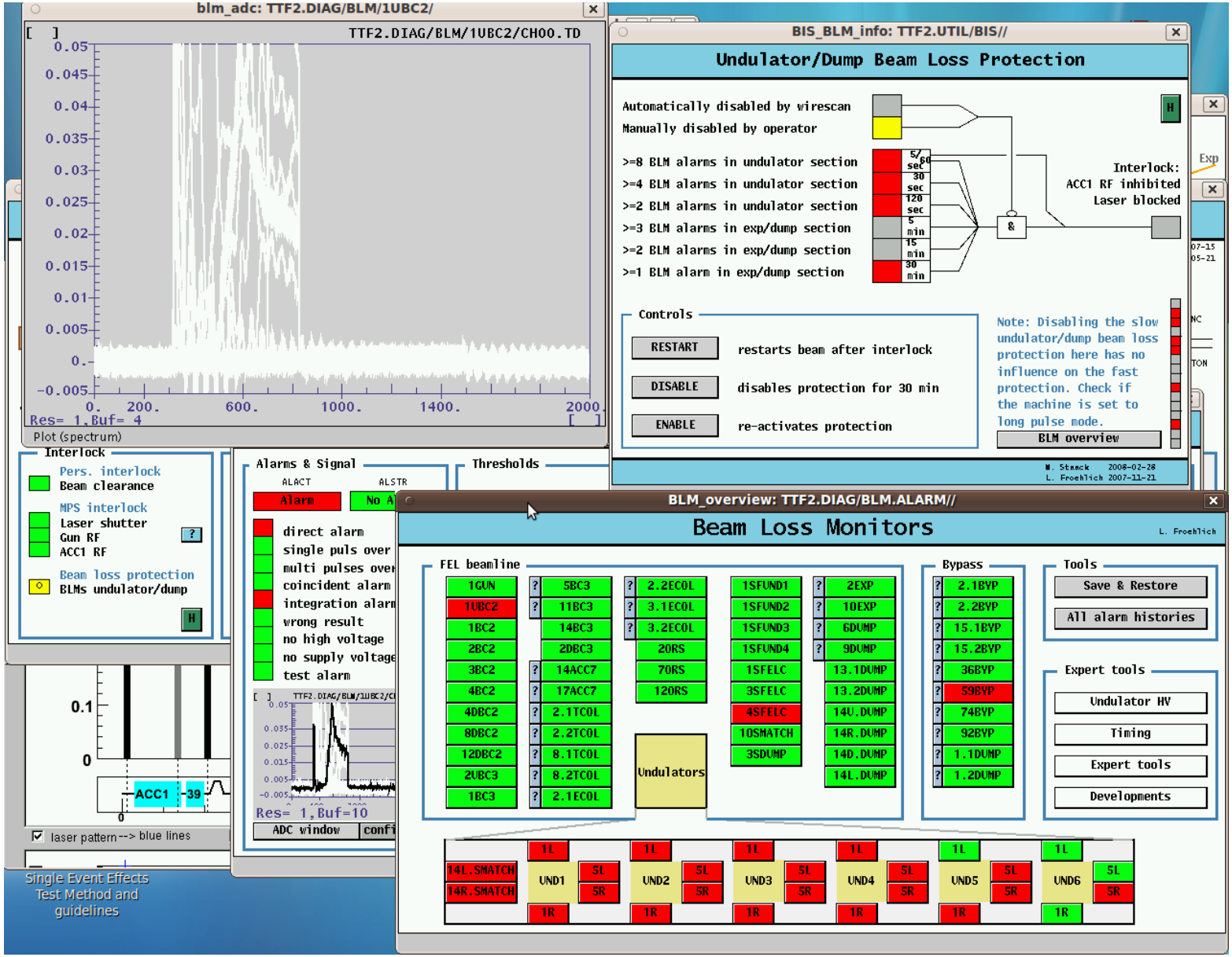

Very seldom (hopefully)

XFEL Beam Loss Monitor Prototype at FLASH

R5900 PMT:
- 28 mm → 30 mm light-guide
- old HV-base (from P. Smirnov)
- 4 channel connected together
- 100 uA average anode current (datasheet)
- 2* 10^6 gain (800 V), 900 V maximum

Assembled: H.Tiessen

PMTs on a Test-stand

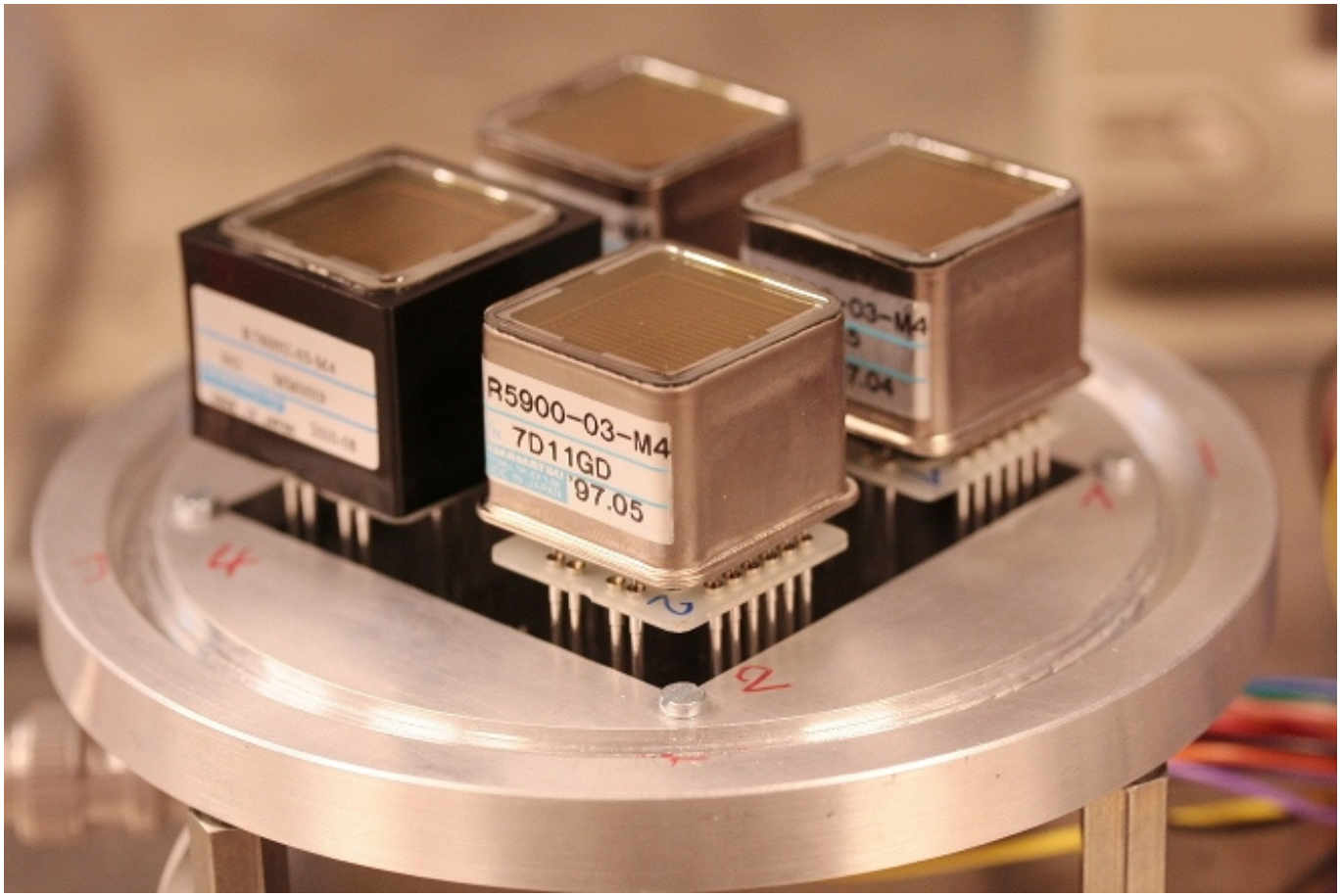

Assembled: H.Tiessen

Three R5900 Photomultipliers and
R7600(pin-compatible with R5900) on a test stand

Signal from the Prototype-0

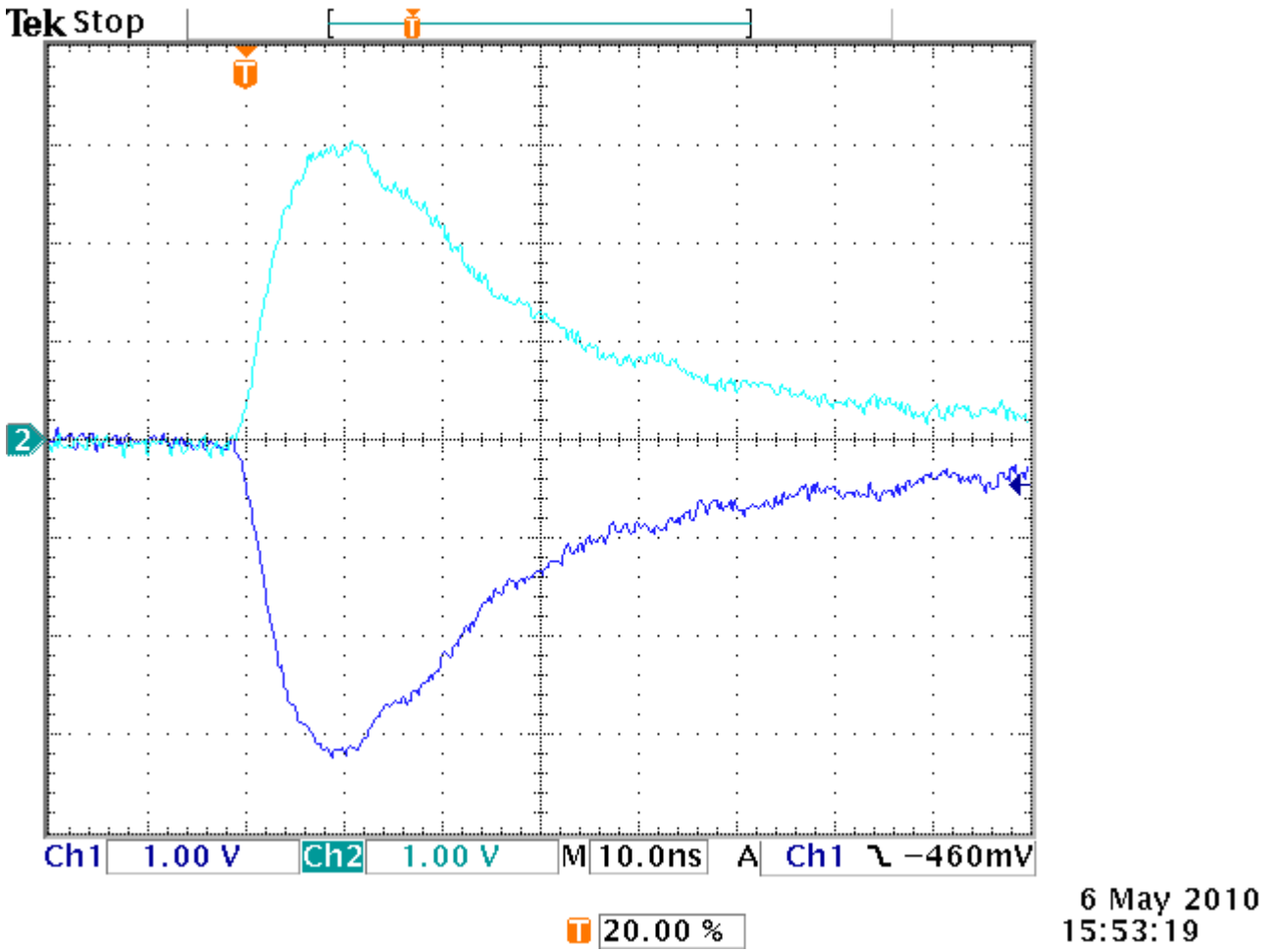

Fast signal from R5900 → requirements to BLM Electronics (→ DESY FE)

BLMs at XFEL

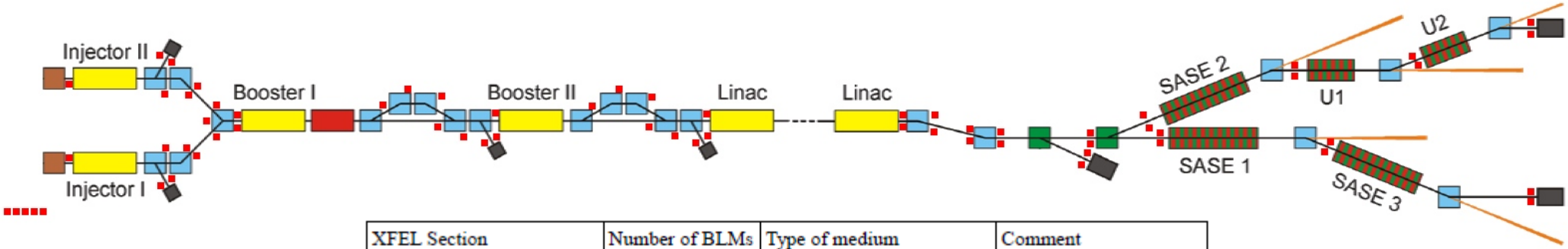

XFEL Section	Number of BLMs	Type of medium	Comment
Injectors+dumps	25	Scintillator+Quartz-glass	Z <119 m
Bunch compressors+dumps	24	Quartz-glass	Z=173–478 m, 4 BLMs per dump included
Main linac	6	Scintillator	BLMs in straight section after the main linac z=1257–1497 m
Collimator	16	Quartz-glass	z=1649–1891 m
SASE 1	68	Scintillator	2 BLMs before the section included; Δz=185m
SASE 2	76	Scintillator	2 BLMs before the section included; Δz=165m
SASE 3	52	Scintillator	2 BLMs before the section + 6 BLMs for dump included; Δz=110m
U1	20	Scintillator	
U2	20	Scintillator	+6 BLMs for dump included
Total	~350	During XFEL commissioning additional(spare), "mobile" BLMs might be necessary	

BLMs at XFEL Undulators

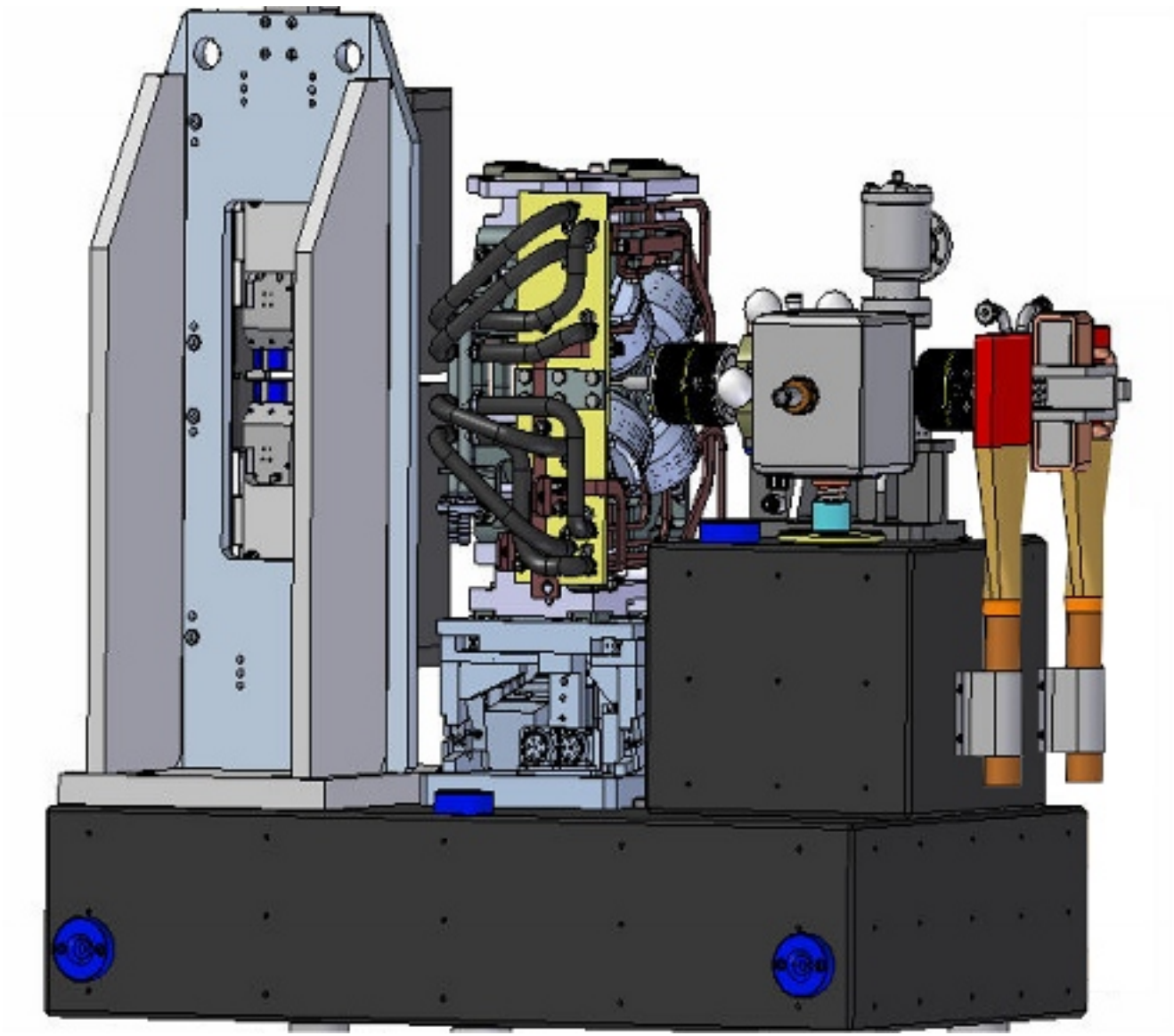

BLMs for XFEL: Prototype-1

Sketch of the Prototype

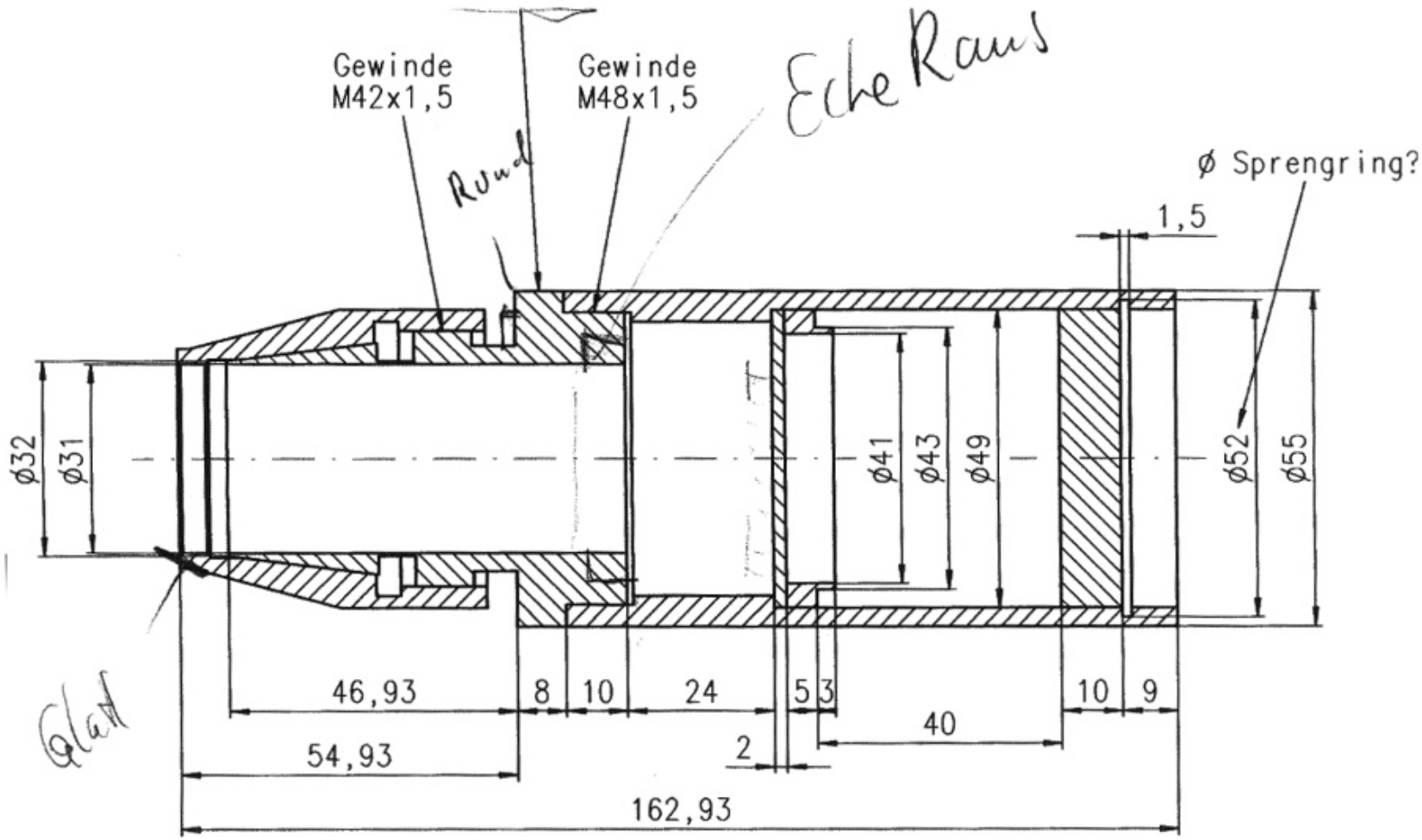

Design: H.Tiessen

HV options

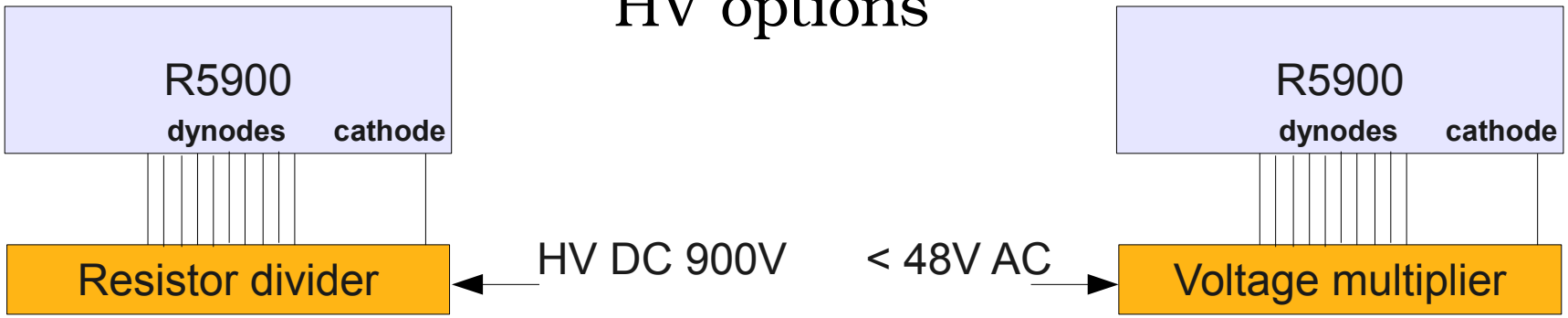
R5900
dynodes
cathode
Resistor divider
HV DC 900V
< 48V AC
R5900
dynodes
cathode
Voltage multiplier

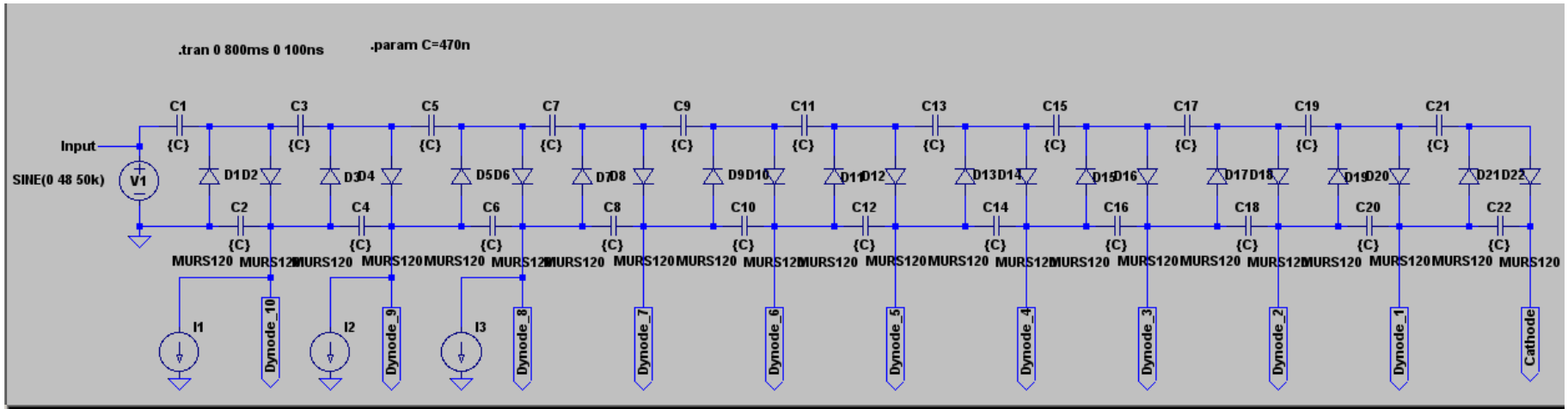
.tran 0 800ms 0 100ns
.param C=470n
Input
SINE(0 48 50k)
V1
C1
C3
C5
C7
C9
C11
C13
C15
C17
C19
C21
C2
C4
C6
C8
C10
C12
C14
C16
C18
C20
C22
D1D2
D3D4
D5D6
D7D8
D9D10
D11D12
D13D14
D15D16
D17D18
D19D20
D21D22
MURS120
I1
I2
I3
Dynode_10
Dynode_9
Dynode_8
Dynode_7
Dynode_6
Dynode_5
Dynode_4
Dynode_3
Dynode_2
Dynode_1
Cathode

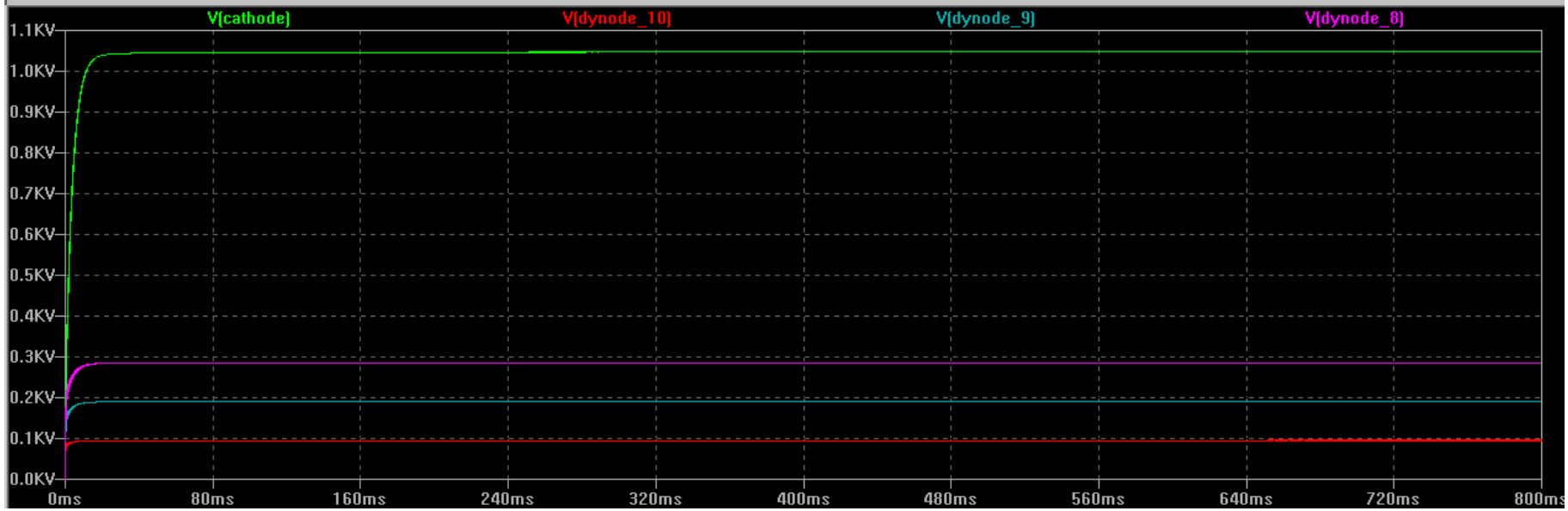
V(cathode)
V(dynode_10)
V(dynode_9)
V(dynode_8)
1.1KV
1.0KV
0.9KV
0.8KV
0.7KV
0.6KV
0.5KV
0.4KV
0.3KV
0.2KV
0.1KV
0.0KV
0ms
80ms
160ms
240ms
320ms
400ms
480ms
560ms
640ms
720ms
800ms

Cockroft-Walton multiplier

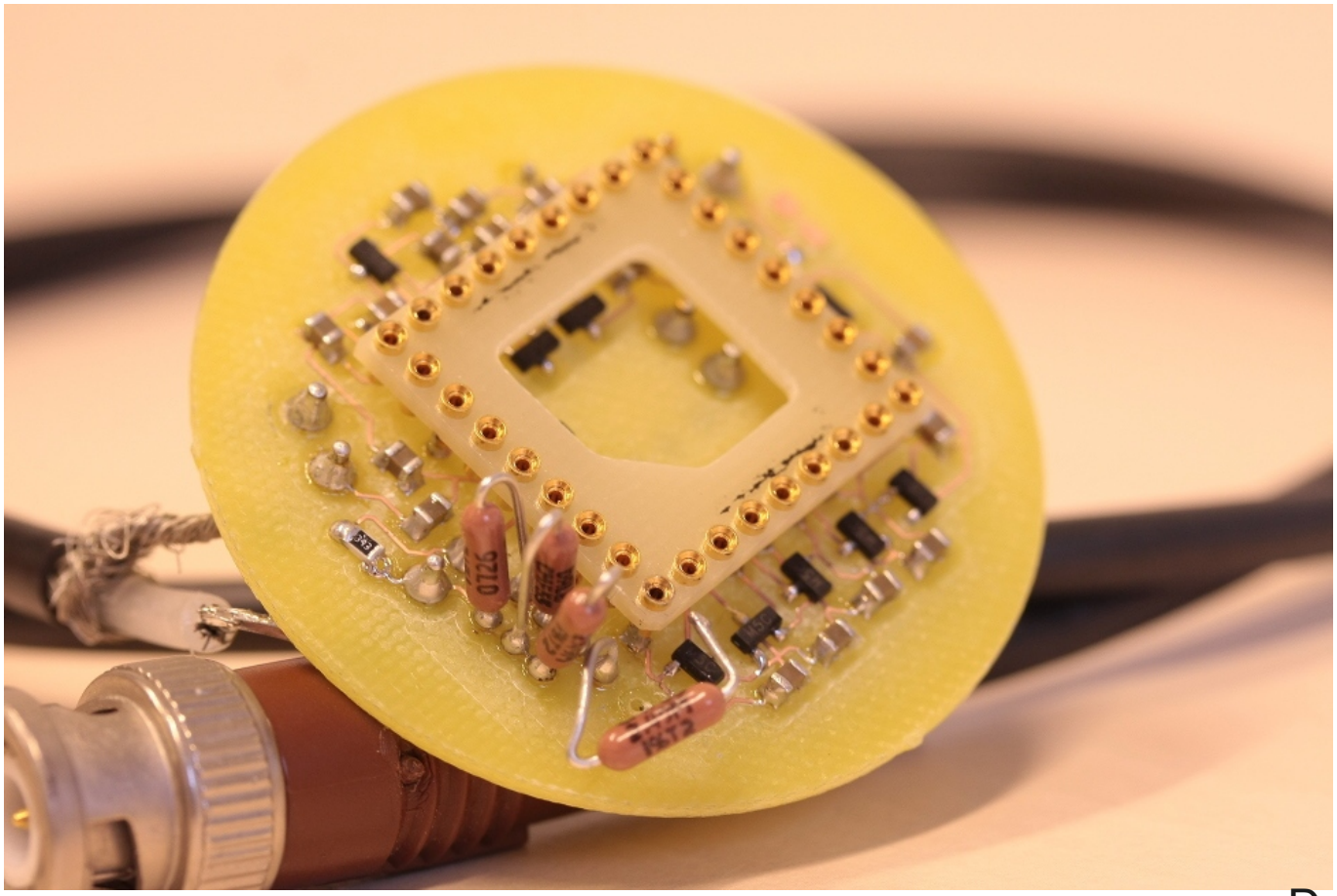

Design: B. Michalek

Amplitude	1	2	3	4	5	6	7	8	9	10	Cathode	Comment
1V	-1.46	-2.8	-4.09	-5.35	-6.54	-7.74	-8.92	-10.08	-11.23	-12.37	-12.7	10Mohm voltage divider
1V	-1.47	-2.81	-4.11	-5.38	-6.57	-7.78	-8.96	-10.13	-11.28	-12.42	-13.54	
2V	-2.35	-6.55	-9.72	-12.84	-15.93	-18.98	-22.01	-25.02	-27.99	-30.95	-33.87	
4V	-7.26	-14.38	-21.45	-28.46	-35.43	-42.34	-49.2	-56.02	-62.78	-69.5	-76.1	
5V	-9.28	-18.43	-27.52	-36.53	-45.5	-54.4	-63.23	-72	-80.7	-89.3	-97.9	
10V	-19.4	-38.72	-57.9	-77	-95.9	-113.9	-133.5	-152	-170.5	-188.8	-207	

Voltage Ripples on the Cathode Pin

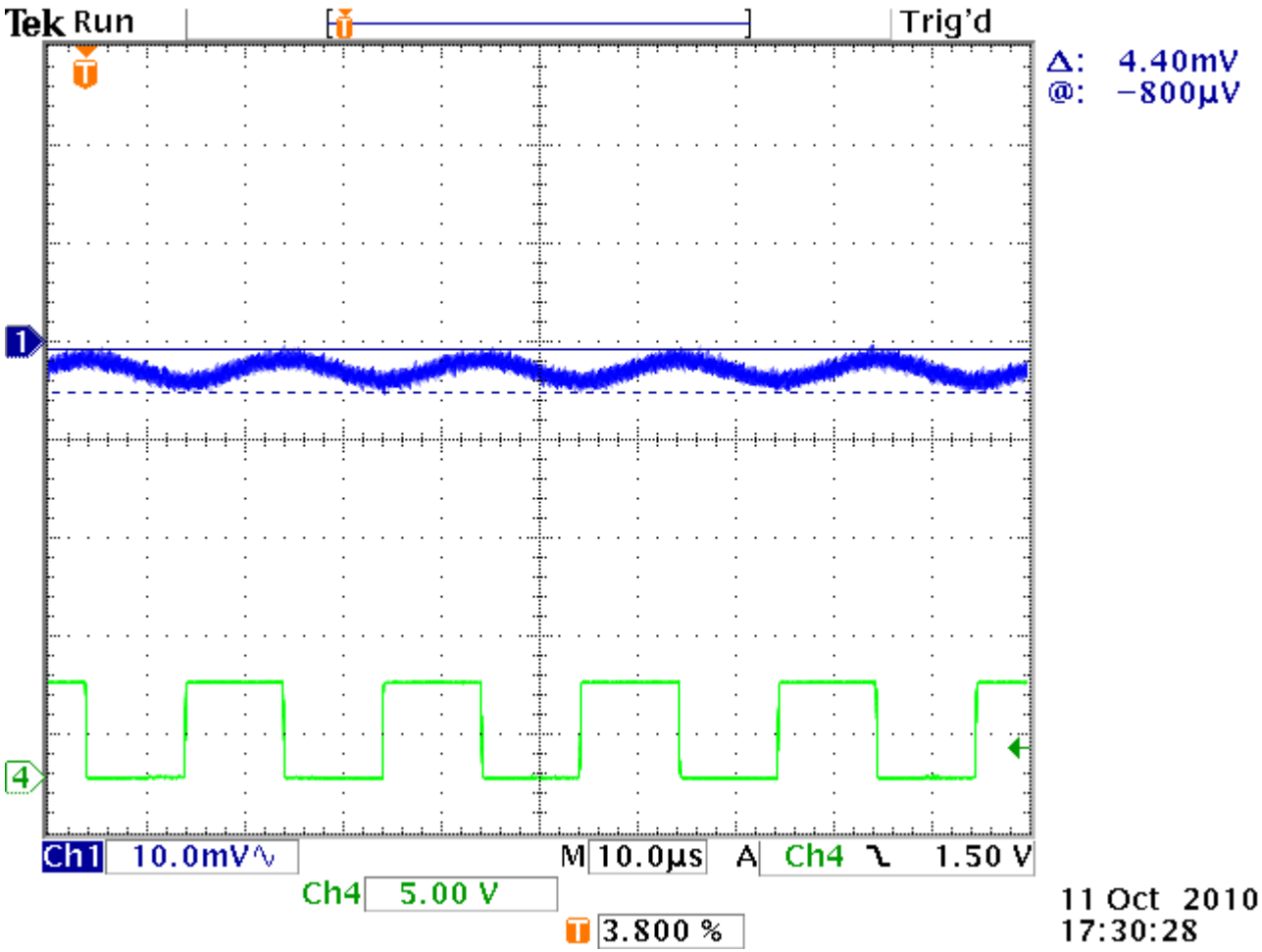

Voltage ripple on cathode;10V pp, sine wave 50 kHz

BLMs for XFEL

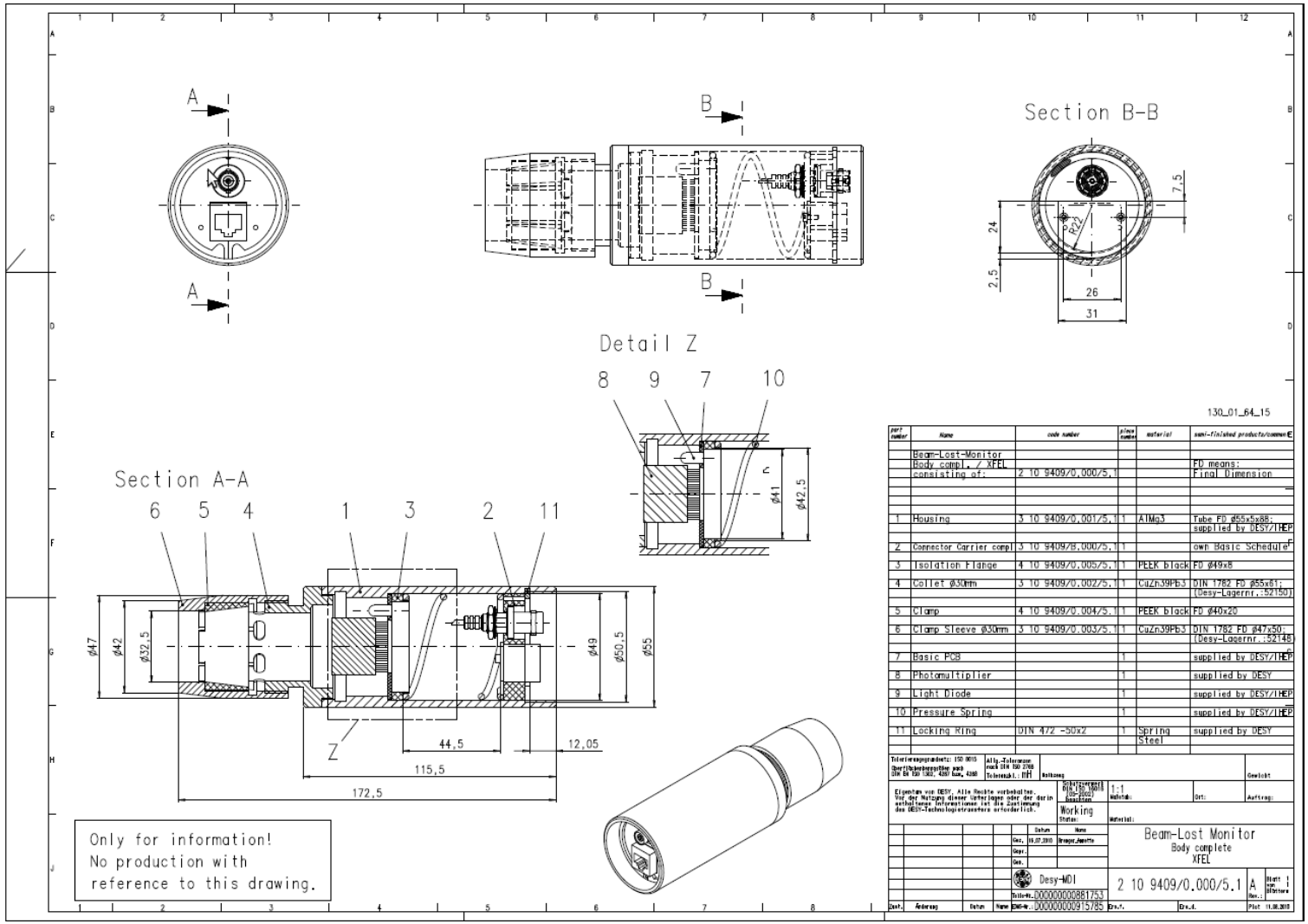

Drawing by M.Siemens

To be produced by IHEP

Summary

- 83 BLMs at FLASH in operation
- BLM calibration requires attention

- XFEL BLM Prototypes are being prepared for tests at FLASH (January 2011)
- Calibration precedure yet to be elaborated