Intra-train Longitudinal Feedback for Beam Stabilization at FLASH

Ch. Behrens[1)], M.-K. Bock[1)], M. Felber[1)], P. Gessler[1)], K. Hacker[1)], W. Koprek[1)], H. Schlarb[1)], S. Wesch[1)], C.Schmidt[1)], S. Schulz[2)], B. Steffen[1)], J. Szewinski[3)]

[1)] Deutsches Elektronen-Synchrotron, Hamburg, Germany
[2)] University of Hamburg, Germany
[3)] The Andrzej Soltan Institute for Nuclear Studies, Swierk, Poland

Motivation

Demanding requirements for the bunch train stability at FLASH

- sFLASH experiment
  - HHG laser pulse length ~ 40 fs
  - longer electron bunches with flat peak current ~ 120 fs
  - bunch arrival time jitter < 40 fs
- Pump-probe experiments
  - Two types of experiments
    - Single shot resolved – mainly interested in measurement of arrival time, repeatability
    - Integrating experiments – detectors integrate over entire macro pulses and every bunch must come at the same time – beam arrival time as good as possible (<10fs out of spec)

FLASH
Pulse Mode Operation

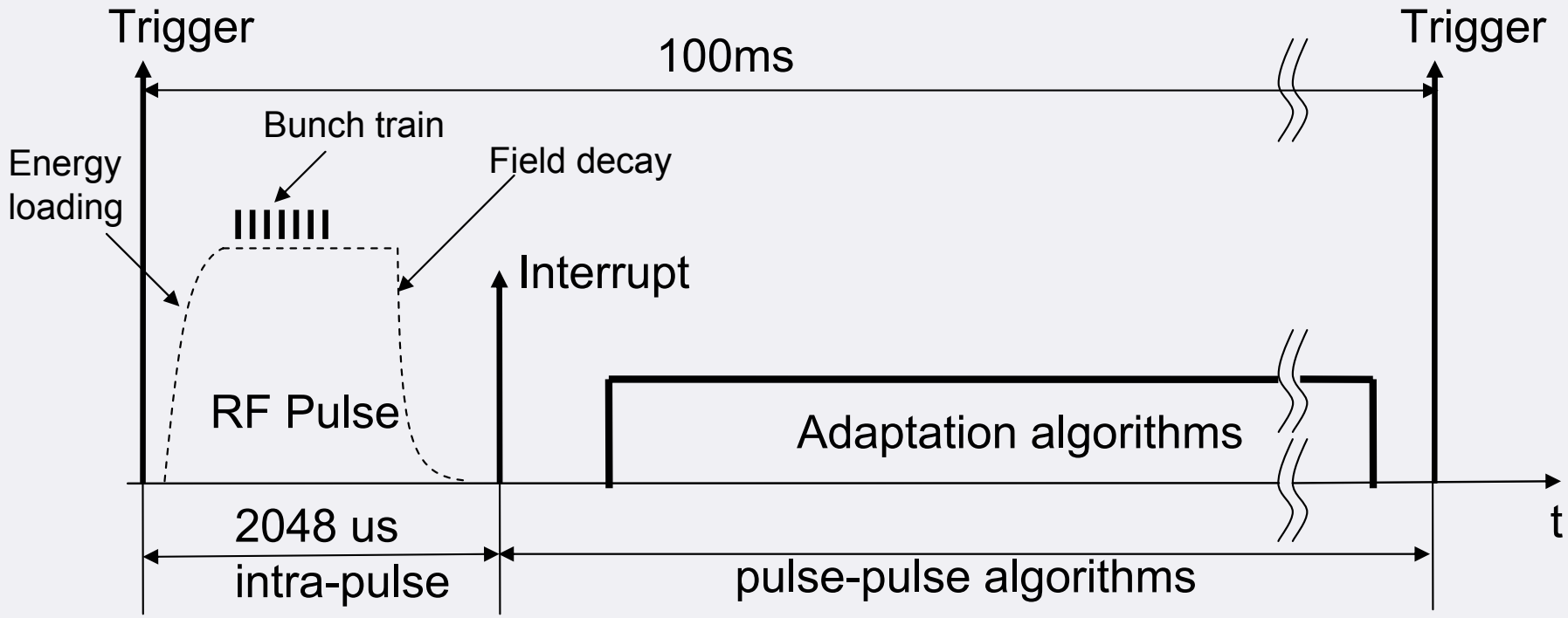

LLRF control systems stabilize field in the cavities:

- Intra-pulse feedback
- Pulse-pulse feedback

Beam based feedback stabilize beam properties

- Intra-train feedback
- Pulse-pulse feedback

Beam Based Feedback
Implementation Goals

Actuators: LLRF Systems

fast (intra-bunch)

adaptive (pulse-pulse)

Sensor: Beam diagnostics

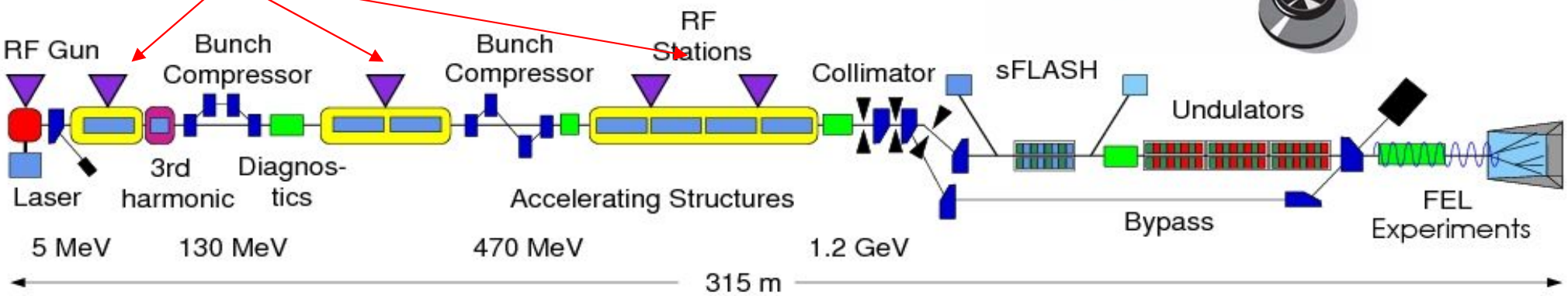

Beam Diagnostic Components

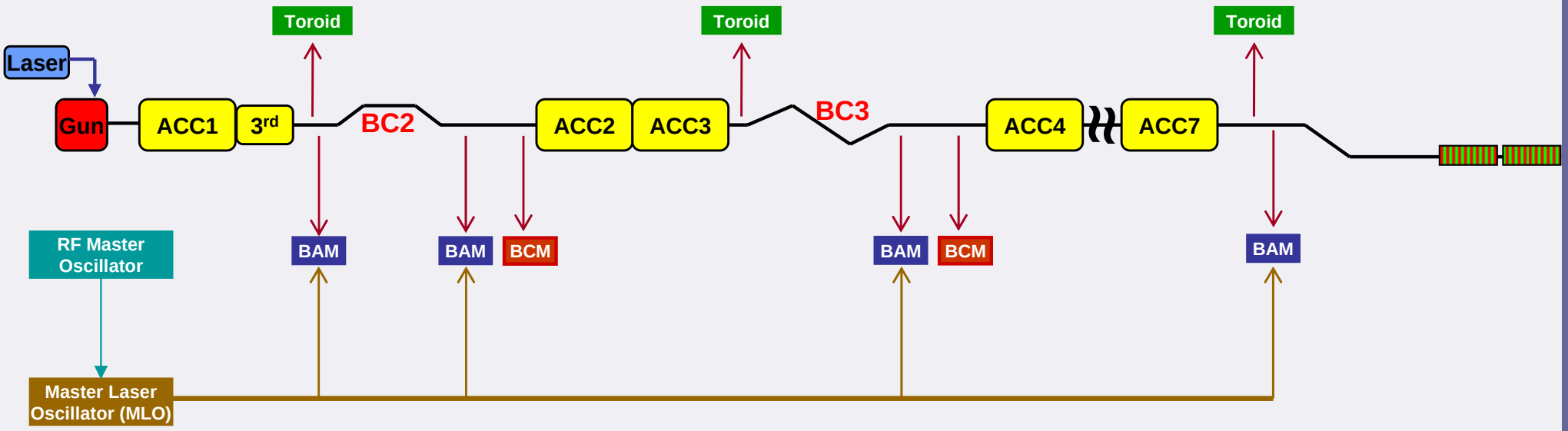

- Beam Arrival Monitors (BAM)
- Bunch Compression Monitors (BCM)
- Charge Measurement (by toroids)
- Master Laser Oscillator (MLO)

Optical Synchronization System

Installation at FLASH

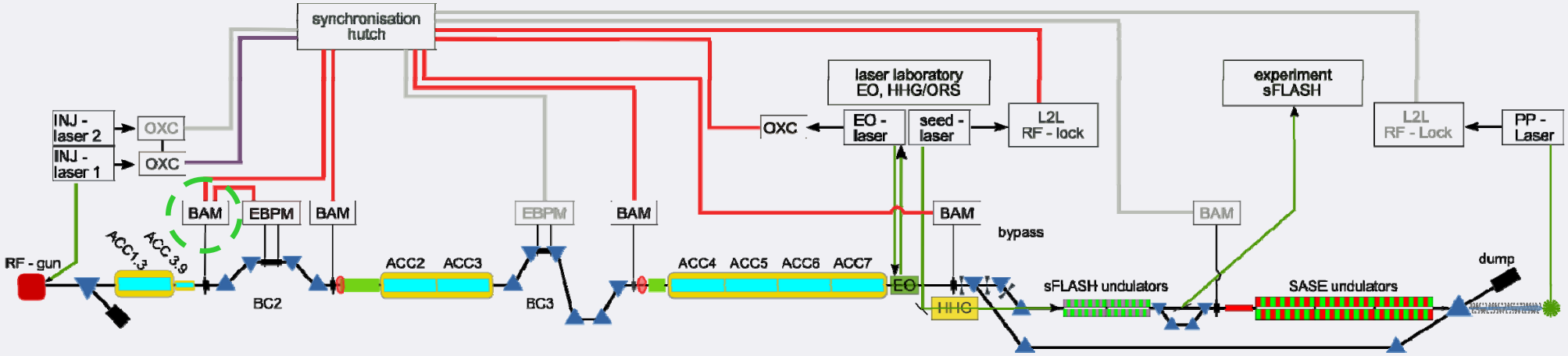

Beam Arrival Monitor
Detector

(pick-up design drawing, courtesy: K. Hacker)

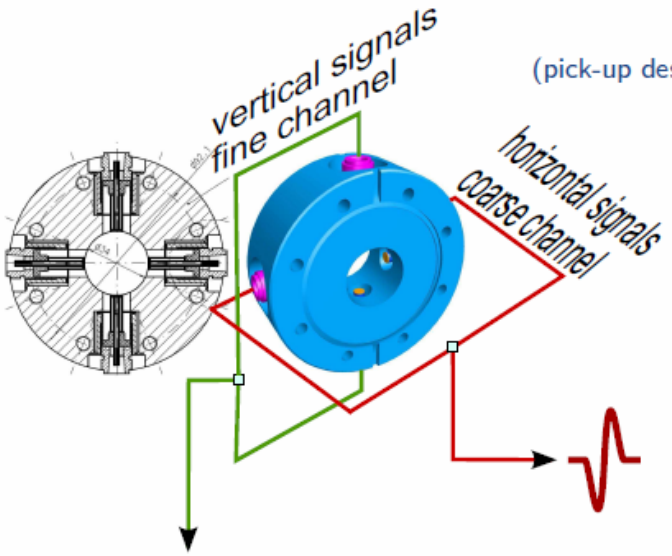

reduced dependency on beam orbit

reduced dependency on bunch charge

sensitivity in terms of
% modulation per fs timing change

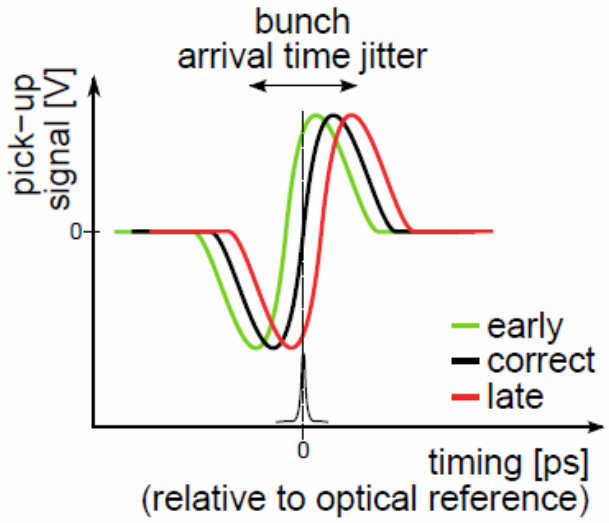

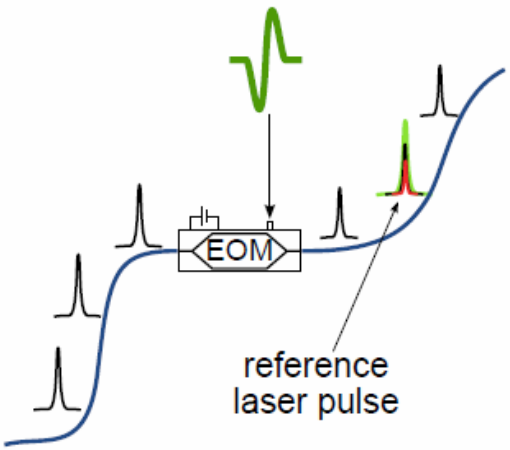

electro-optical modulator

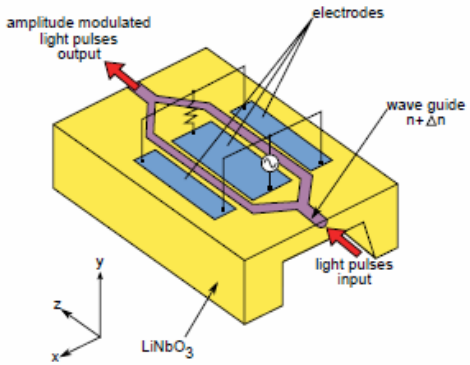

Beam Arrival Monitors

Front-end Electronics

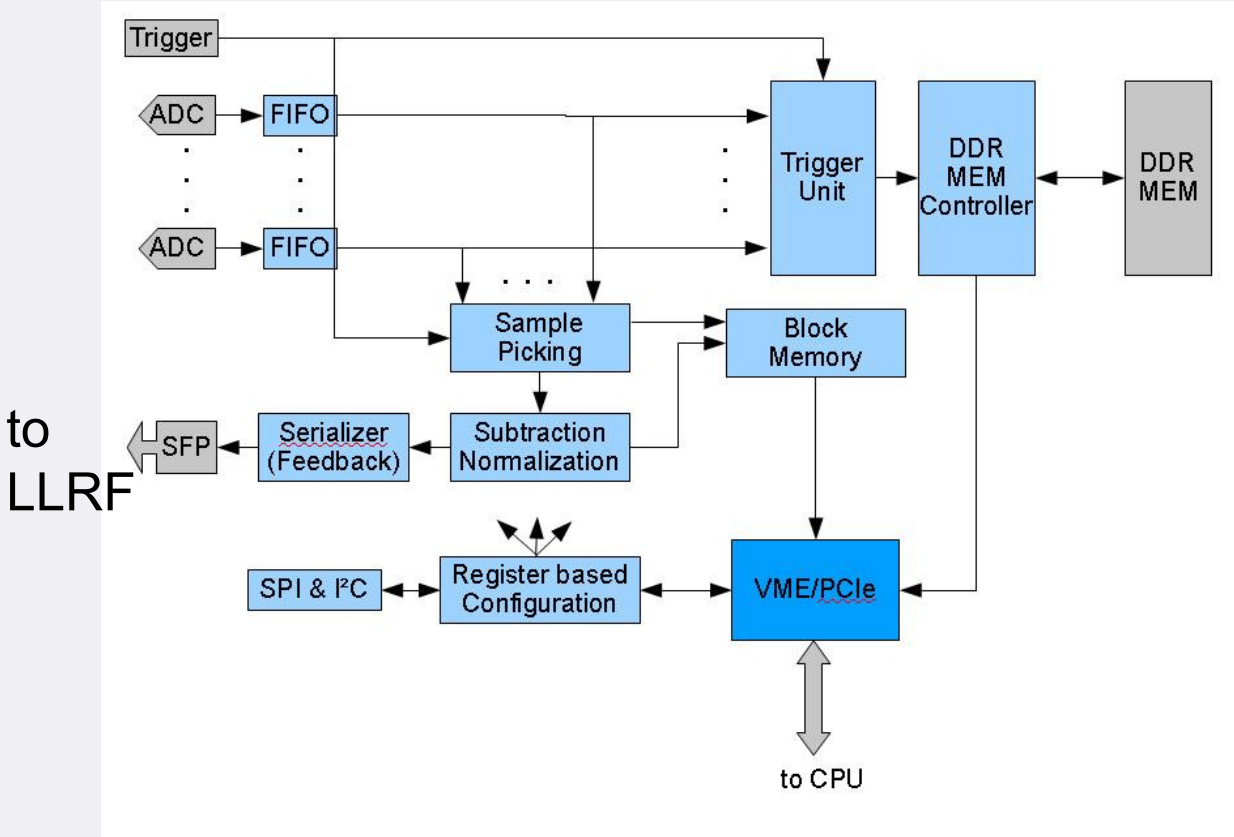

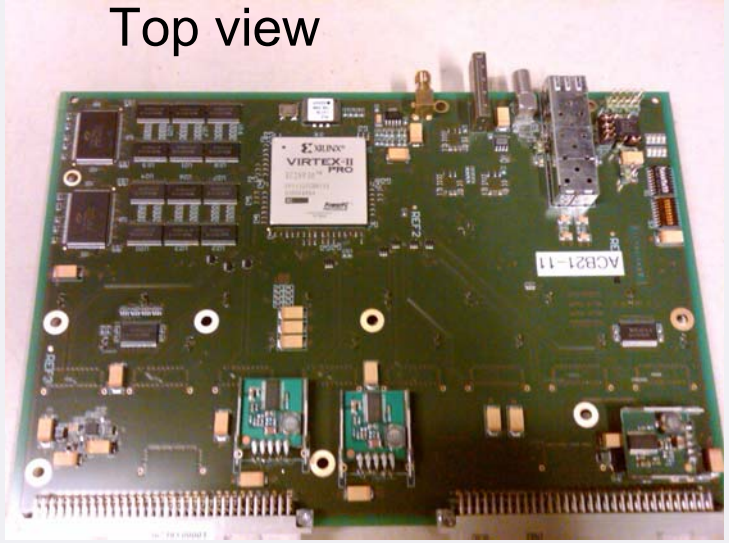

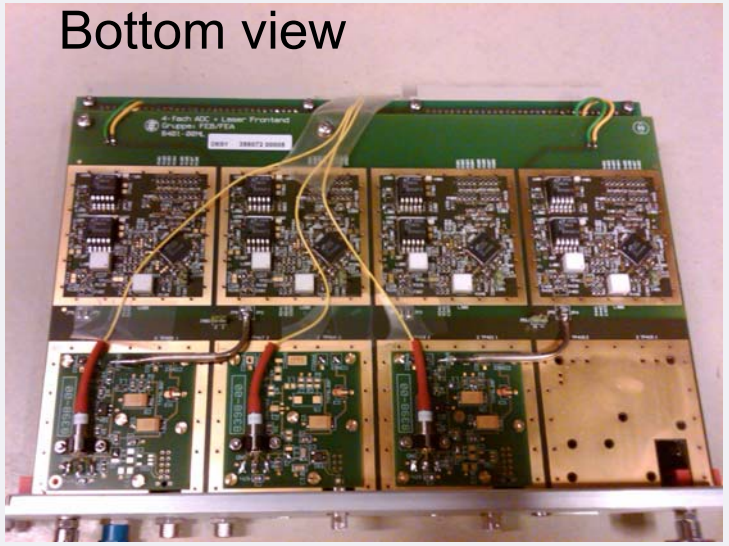

Beam Compression Measurement
Detector

Courtesy of S. Wesch (DESY)

Radiation process:
- electron beam passes slitted metallized screen
- expanded electric field from bunch is diffracted
- screen tilt of 45 allows observation

Coherence effect:
- wavelength is comparable or longer than bunch length
- radiated power is inversely proportional to bunch length
- scales quadraticaly in charge

$$\left.\frac{dU}{d\lambda}\right|_{\text{bunch}} \approx \left.\frac{dU}{d\lambda}\right|_{e^-} \cdot \left[N + N^2 \cdot |\,\mathrm{FT}\{I_{\text{norm}}(z)\}\,|^2\right]$$

Detection:
- pyro electric element LiTaO3 (2mm x 2mm x 27 um)
- deposited heat induces surface charge
- metallization forms a capacitor
- optional black coating increases response at low λ's

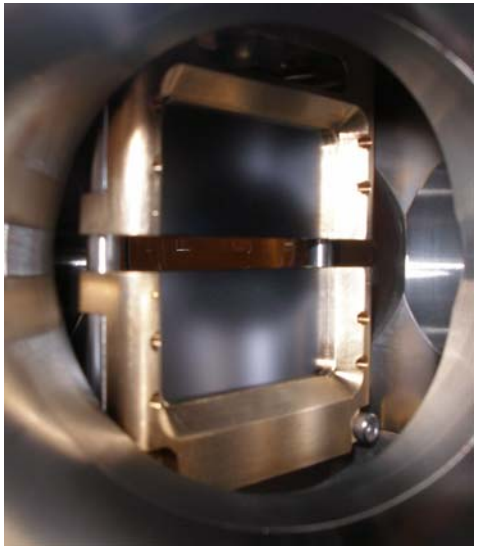

Diffraction radiator (backview)

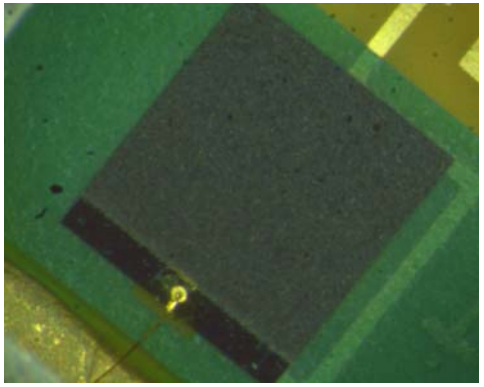

Pyro element

Beam Compression Measurement

Front-end Electronics

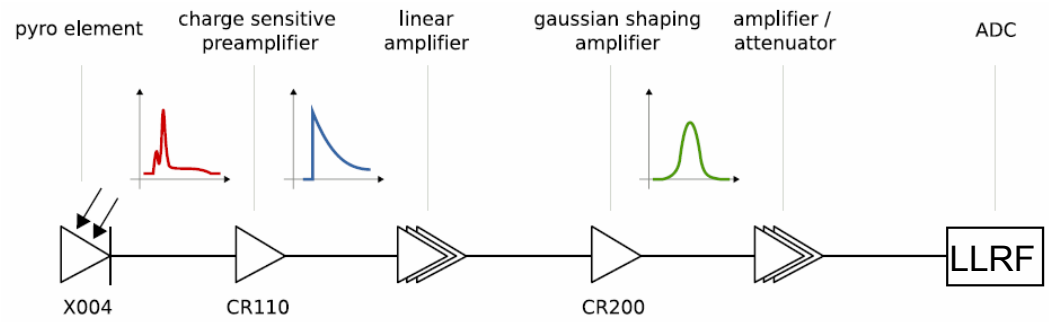

Oscillation at 1.17 MHz

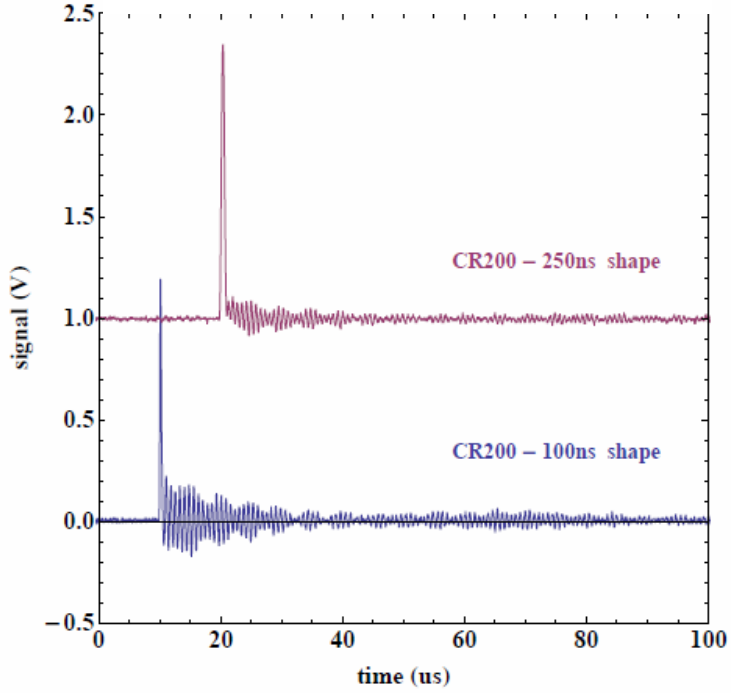

Pile-up effect

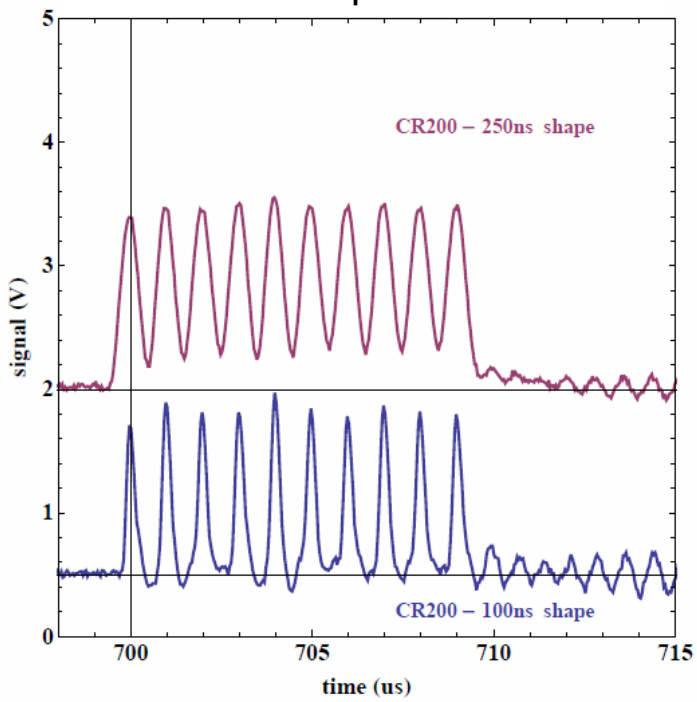

Low Level RF Control Systems

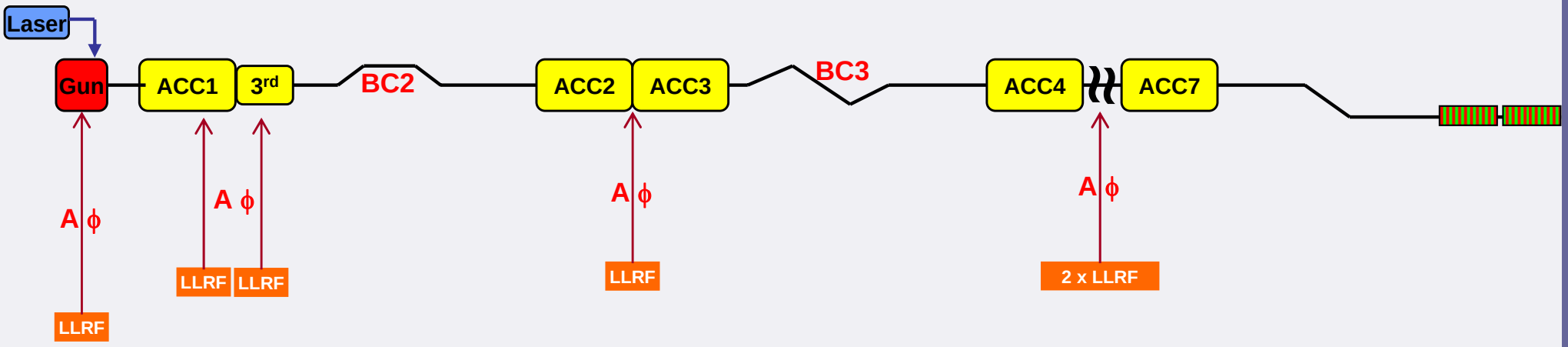

LLRF Systems upgrade during FLASH shutdown allowed implementation of the beam based feedback

- All modules controller by the same hardware board SIMCON-DSP
- Unified firmware and software
- Connected signals from beam diagnostic systems

LLRF Control Systems

- Stabilize amplitude and phase of the accelarting field in the cavities
- Intra-pulse feedback with MIMO controller
- Pulse-pulse algorithms (tables adaptation, calibration, …)
- Frequency control of the cavities using piezo sensors and actuators

SIMCON-DSP

Low Level RF Control Systems

System setup

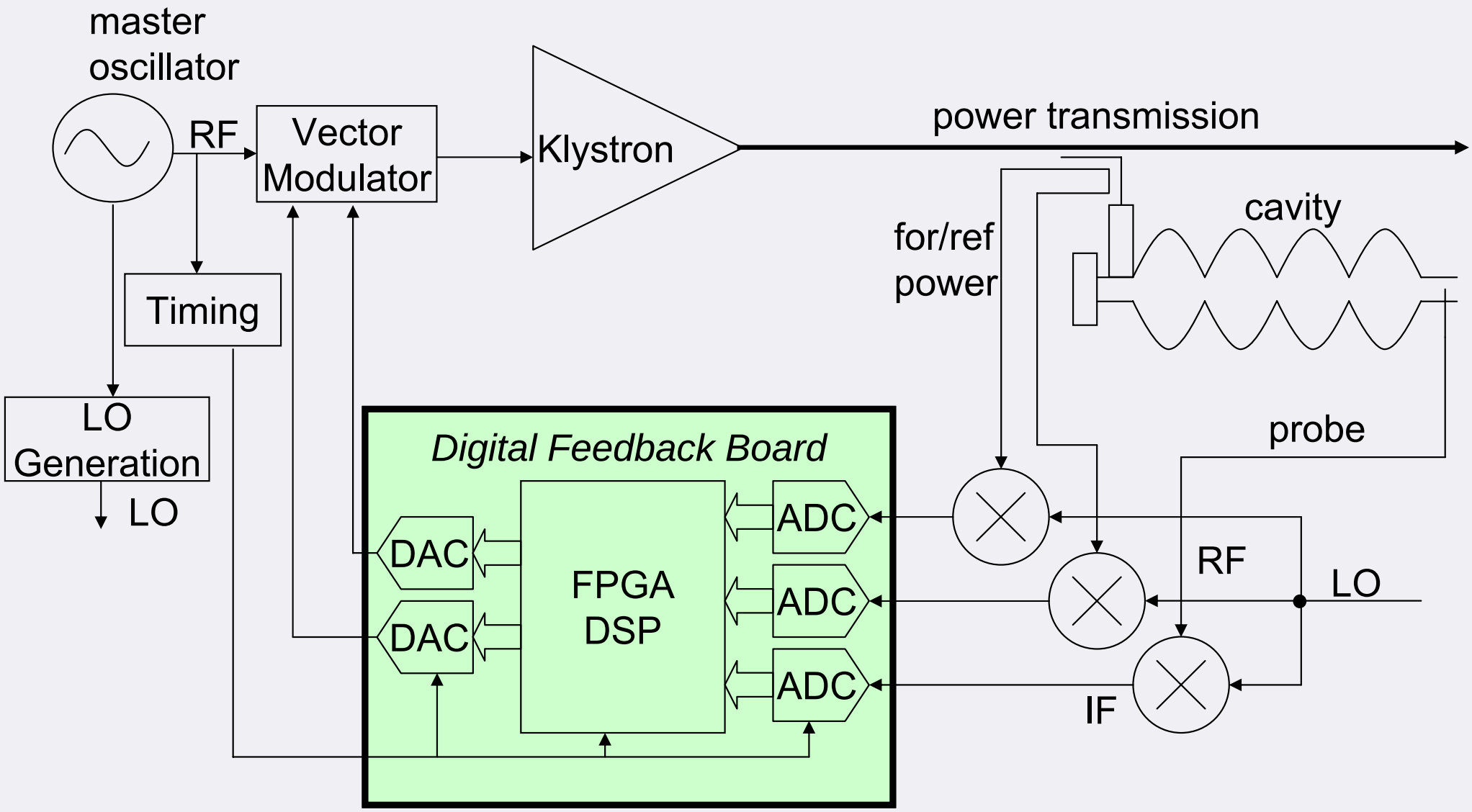

Beam Based Feedback
Installation

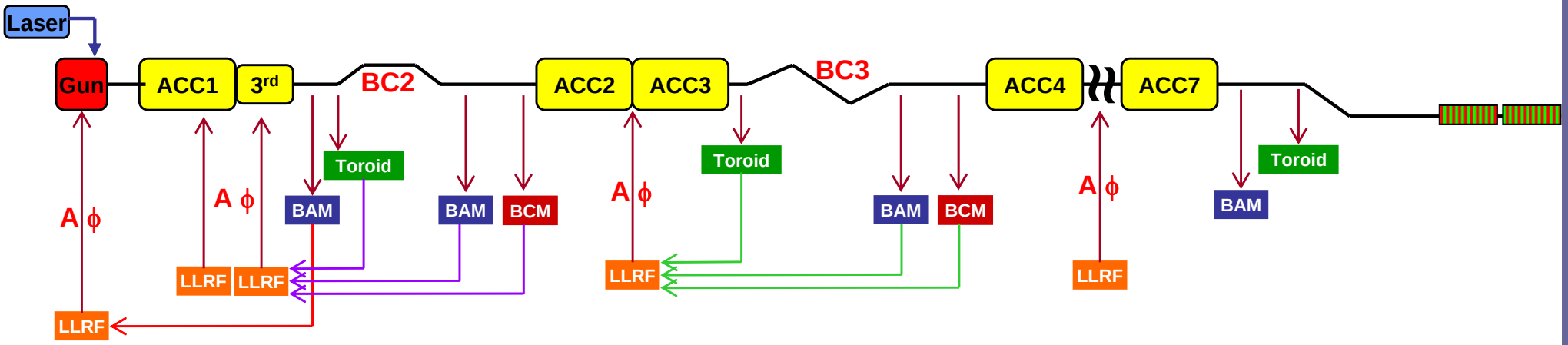

Beam Based Feedbacks:

- BAM before BC2 corrects phase in RF-Gun
- BAM and BCM after BC2 simultaneously correct amplitude and phase in ACC1 and 3rd harmonic
- BAM and BCM after BC3 correct amplitude and phase in ACC23

Results from BBF running at BC2

Low Level RF Control Systems

Intra-train BBF Implementation

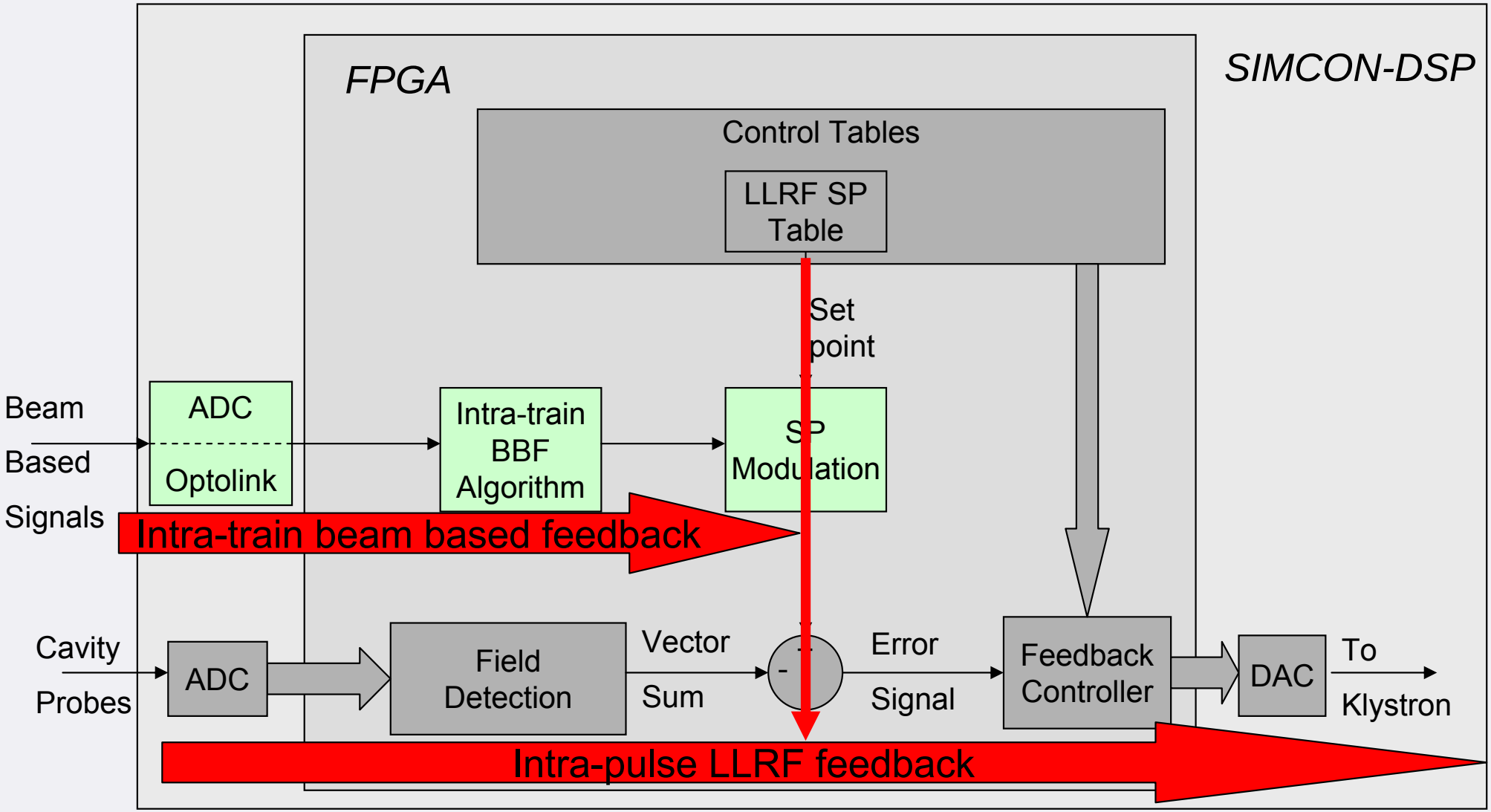

Low Level RF Control Systems

Intra-train BBF Implementation

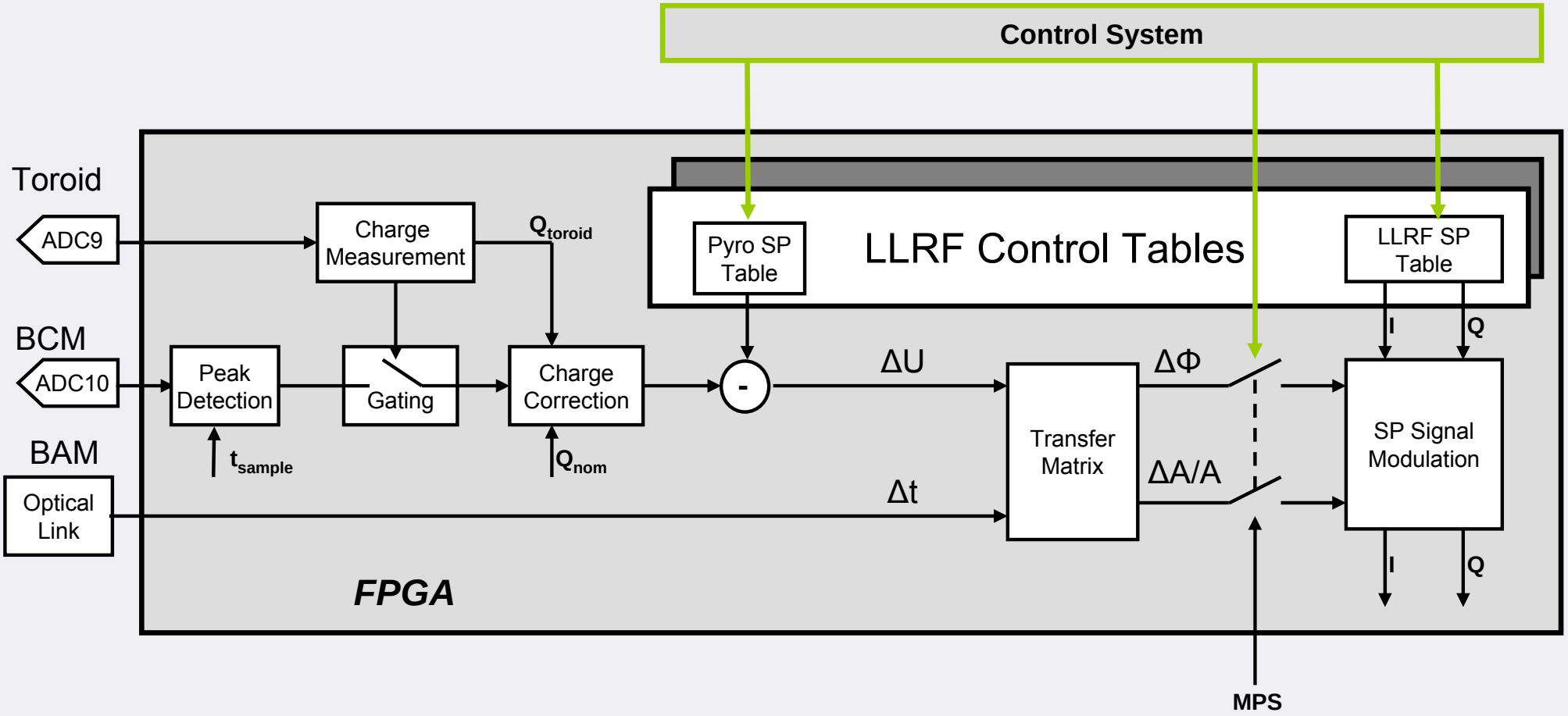

Low Level RF Control Systems

Pulse-pulse BBF Implementation

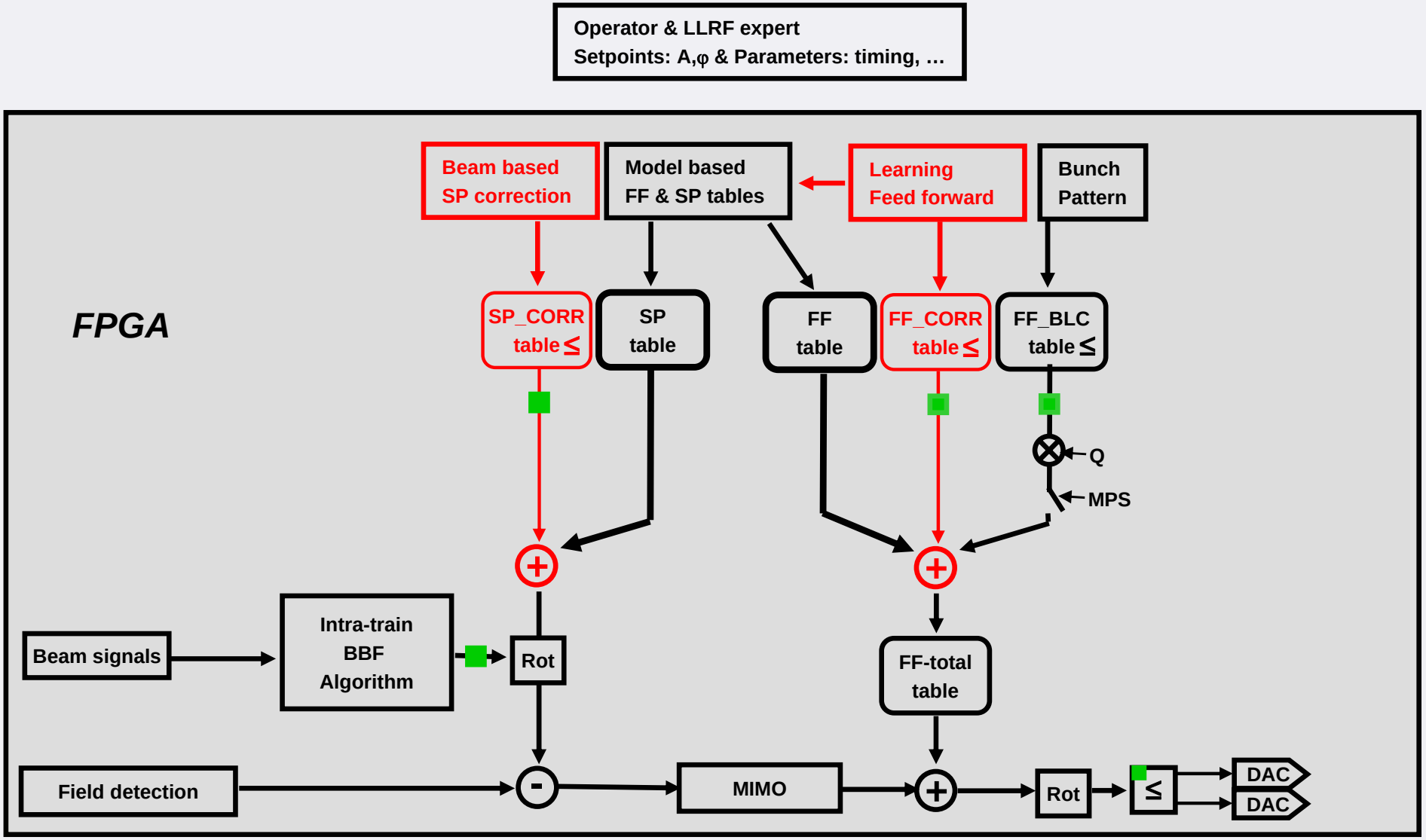

BBF Calibration

Transfer Matrix Determination

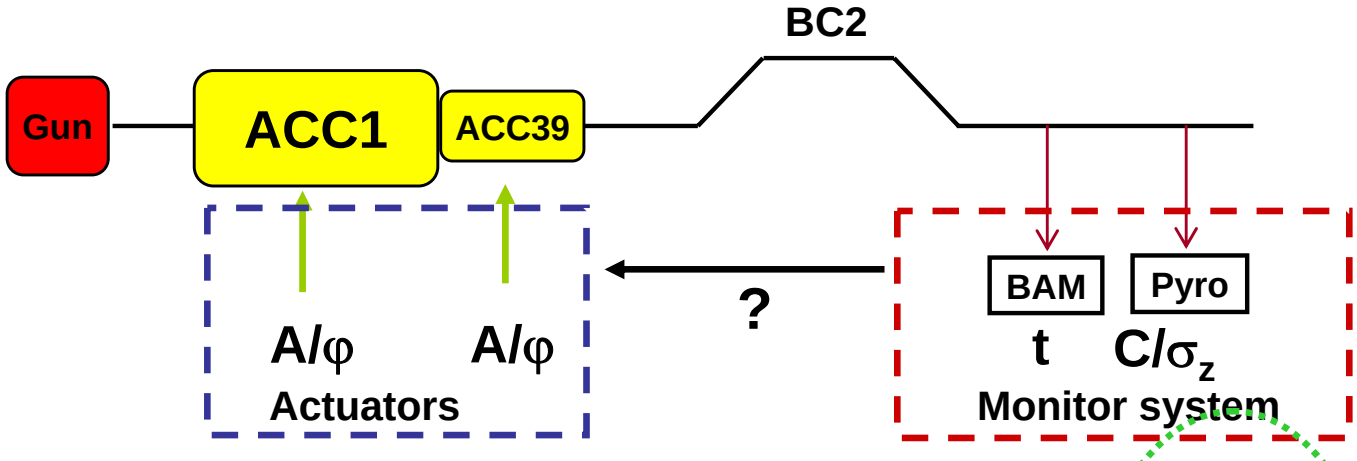

measure

ACC1 ACC39

$$\begin{bmatrix} \Delta t_{BC2} \\ \Delta C_{BC2} \end{bmatrix} = \begin{bmatrix} T_{11} & T_{12} & T_{13} & T_{14} \\ T_{21} & T_{22} & T_{23} & T_{24} \end{bmatrix} * \begin{bmatrix} \frac{\Delta A_1}{A_1} \\ \Delta\phi_1 \\ \frac{\Delta A_{39}}{A_{39}} \\ \Delta\phi_{39} \end{bmatrix}$$

scanning

calculate

BBF Calibration

Transfer Matrix Determination

off crest | ACC1 | ACC39 | **on crest**

Beam Arrival Time Change

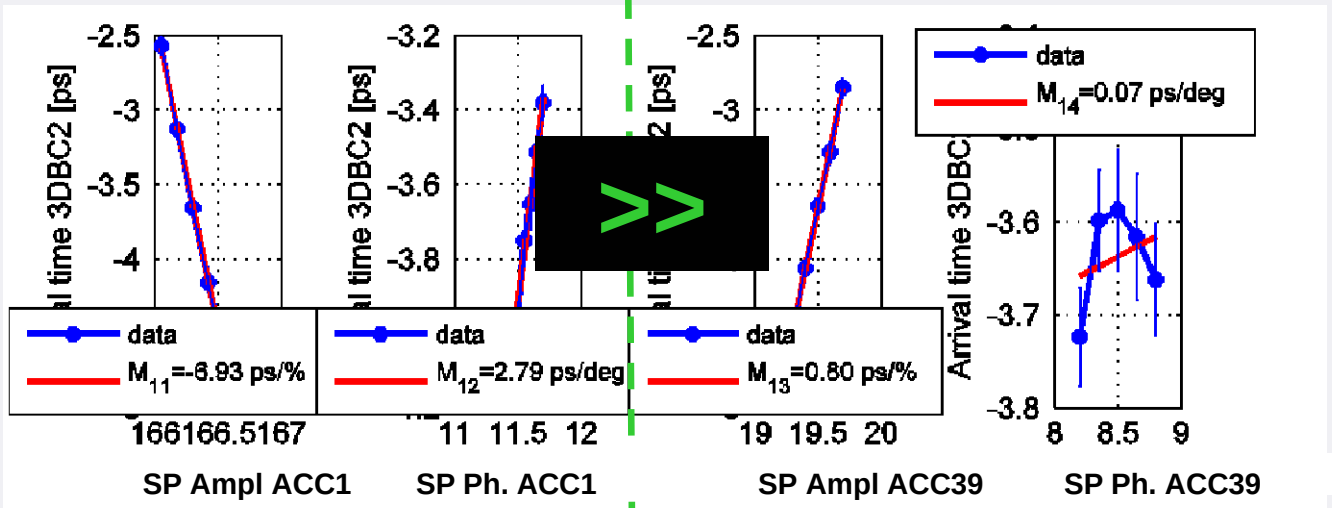

Bunch Compression Change

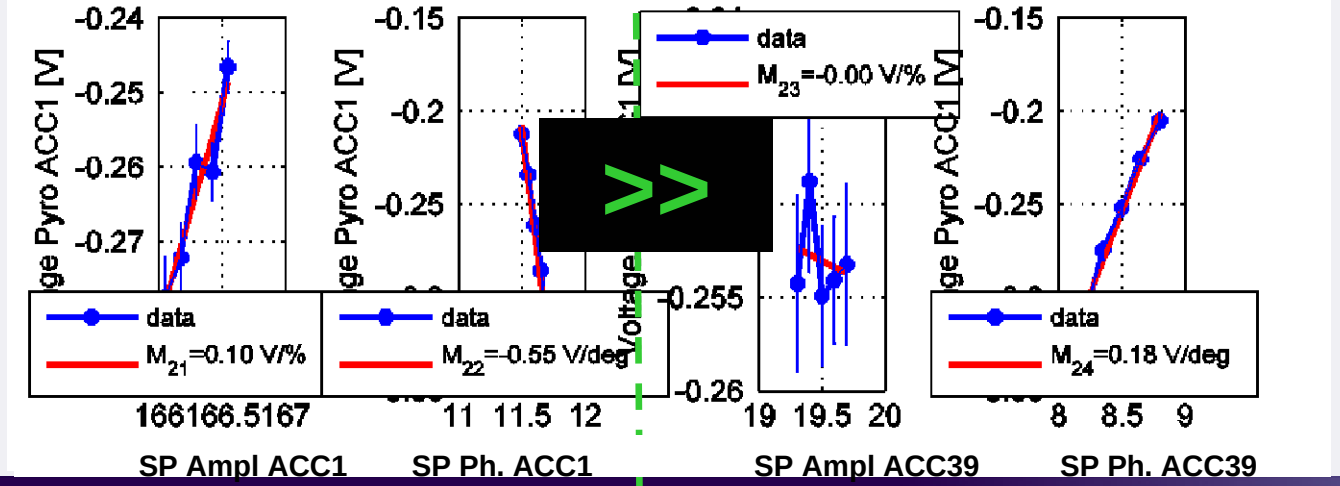

Measurements
Learning Feed Forward

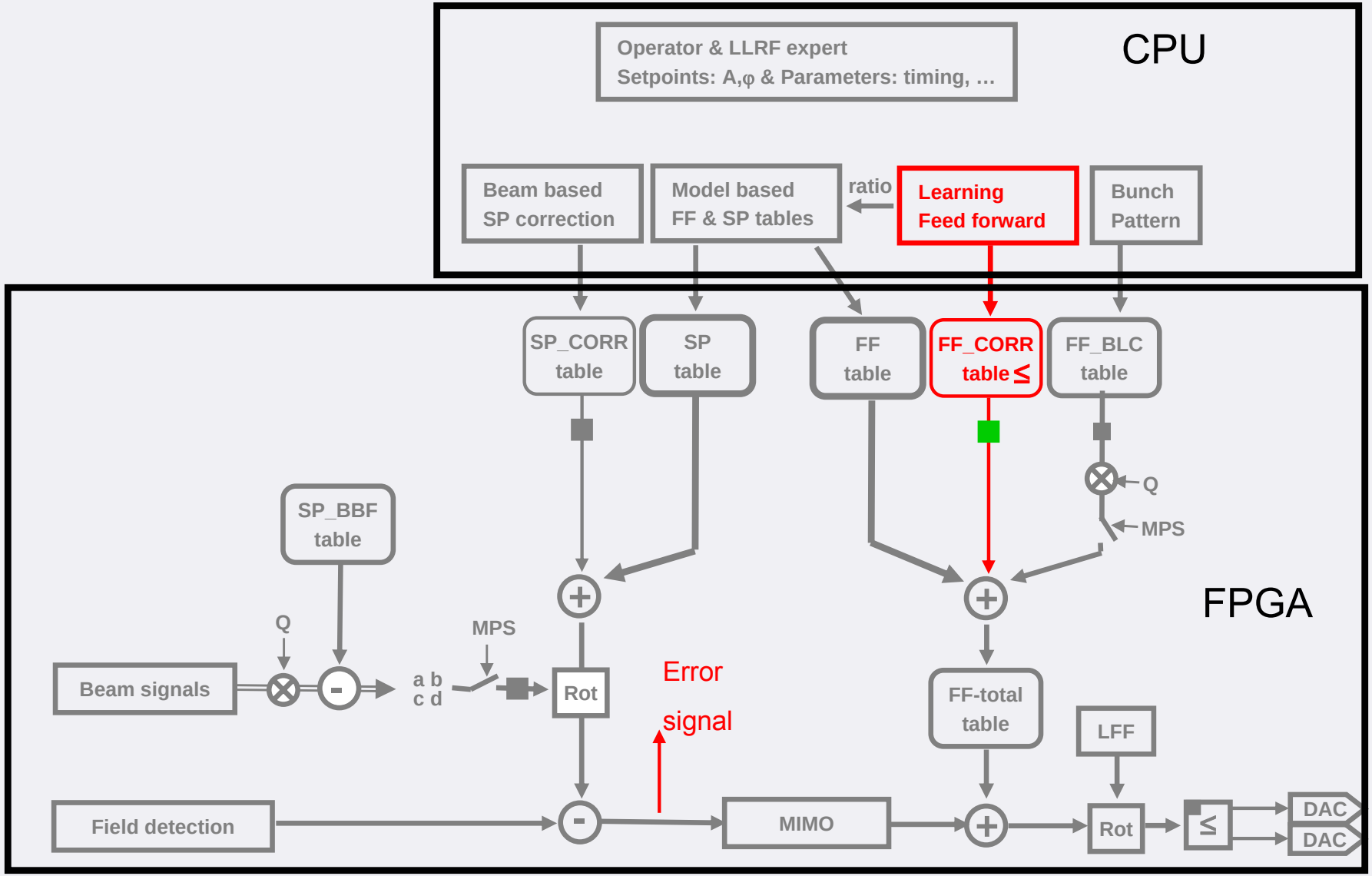

Measurements

Learning Feed Forward

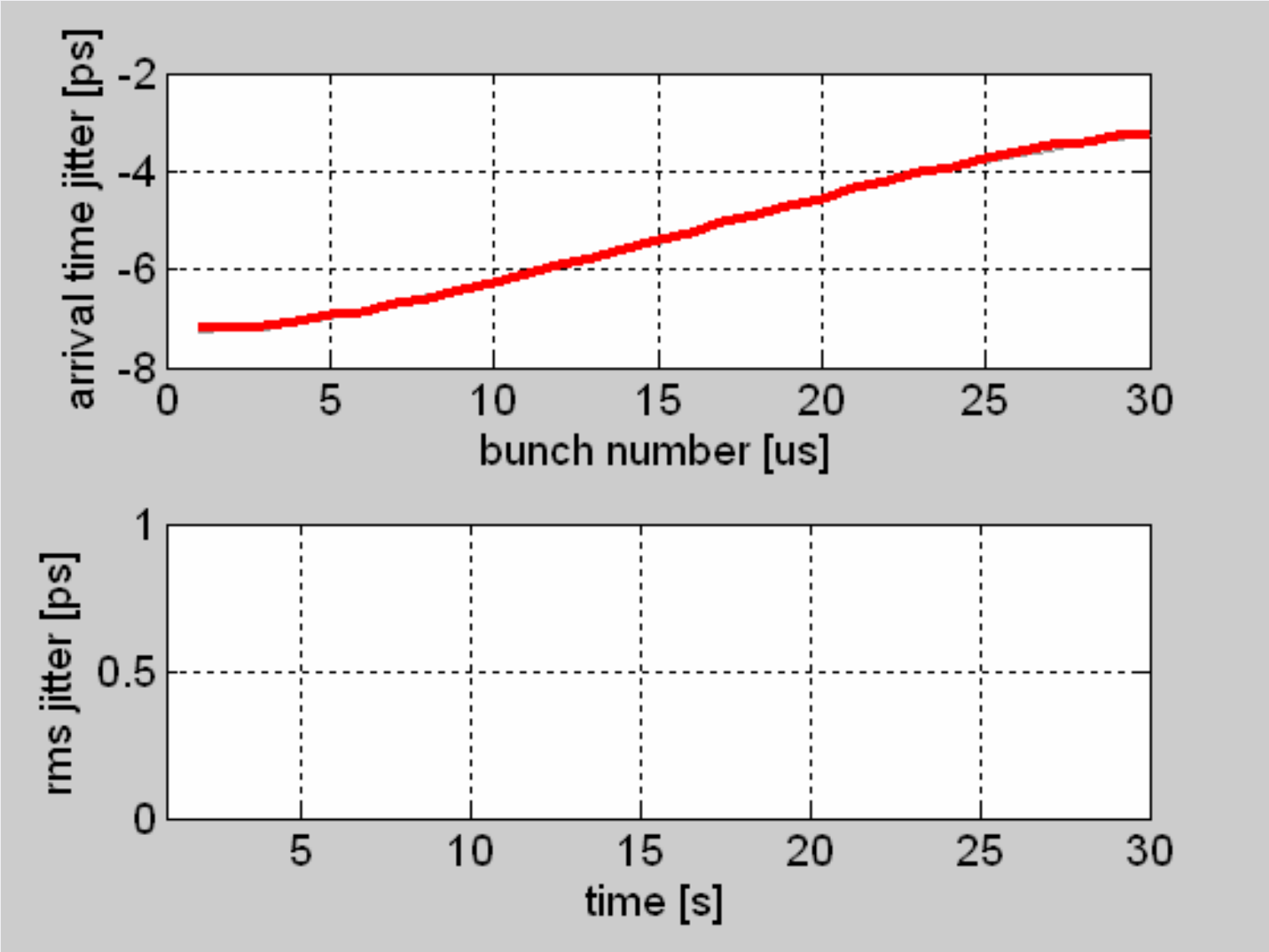

Measurements

Learning Feed Forward

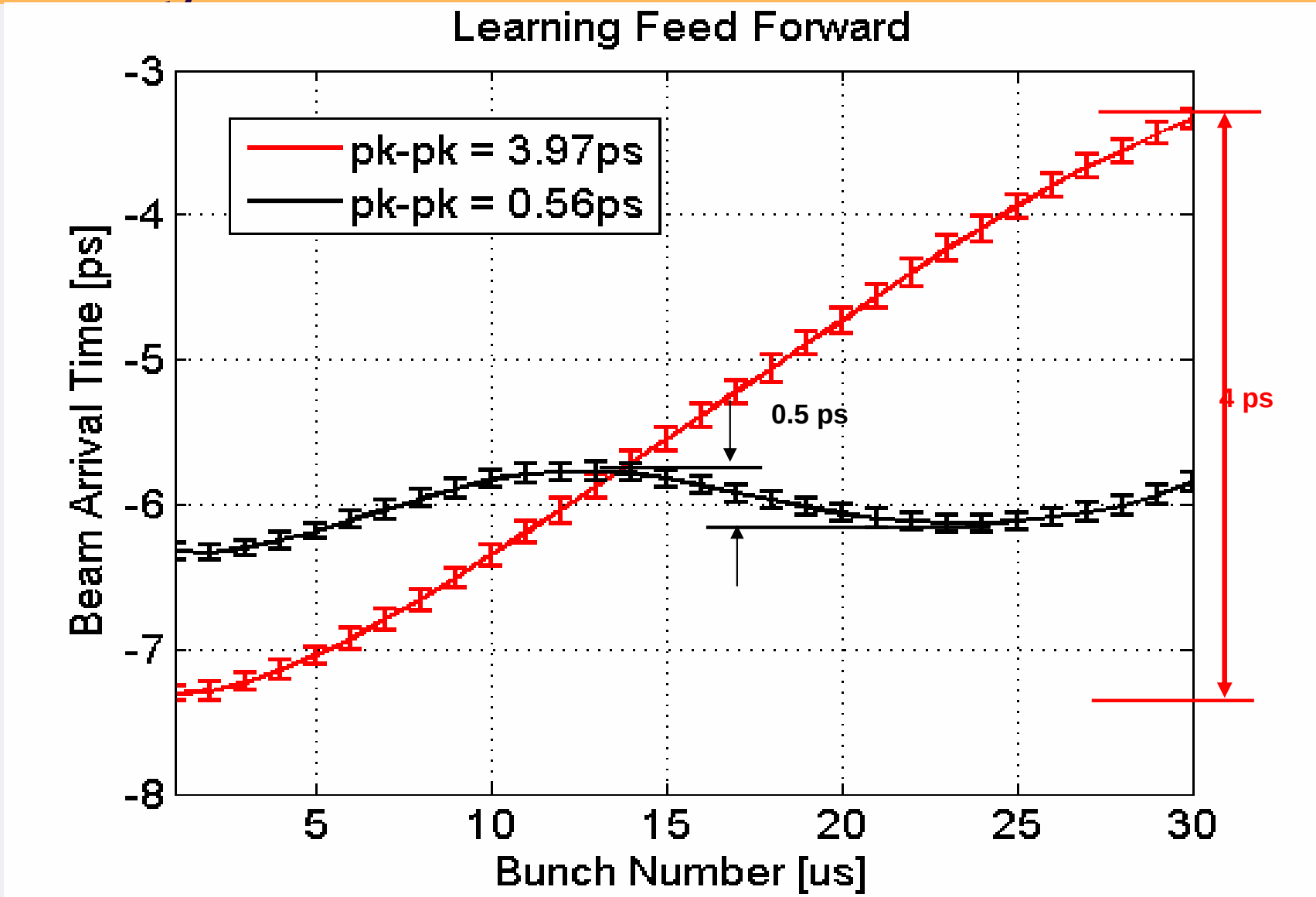

Low Level RF Control Systems

Intra-train BBF Implementation

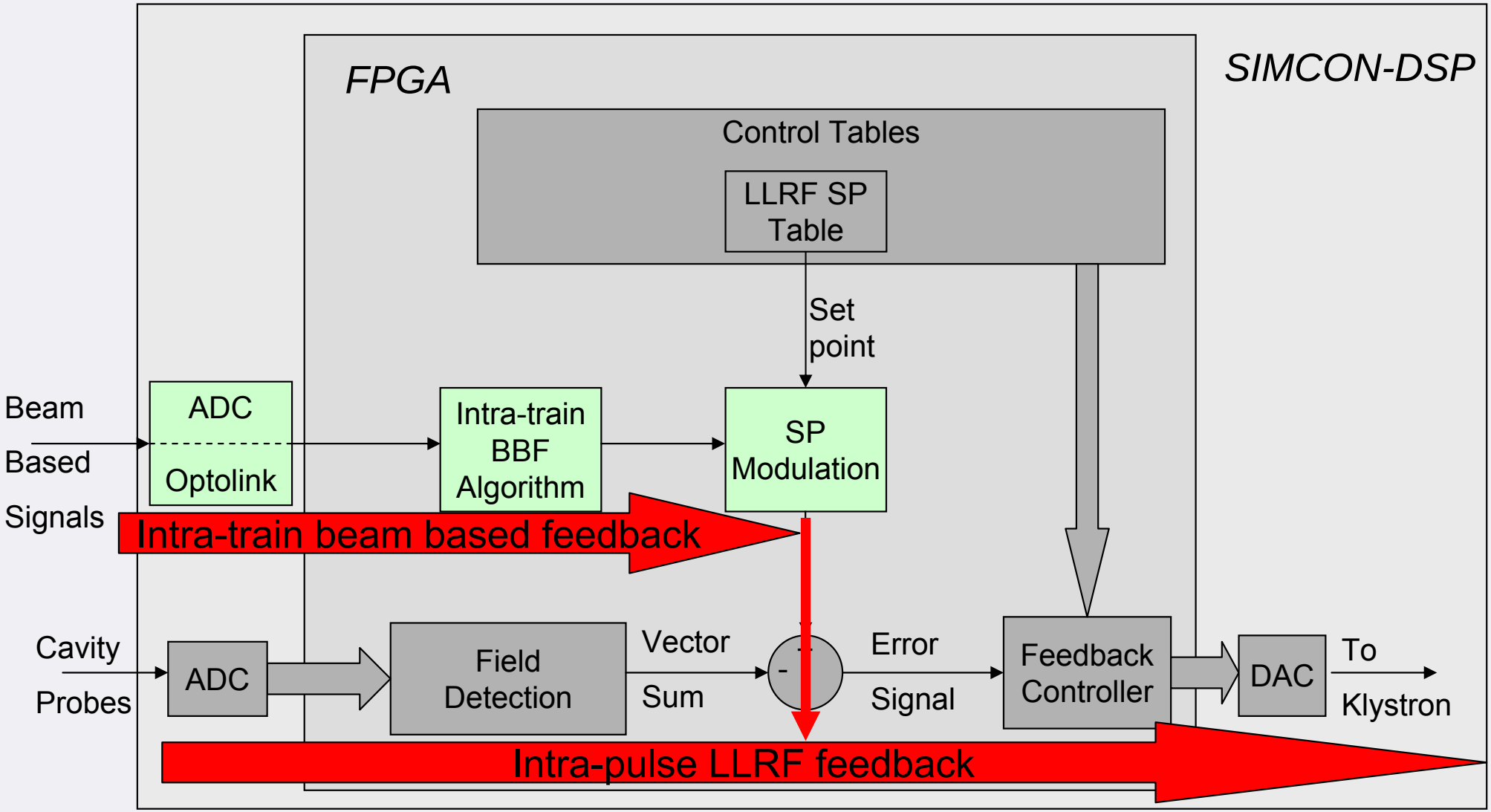

Measurement

Intra bunch train arrival time

Conditions: *Full BBF on ACC1 and ACC39*
Measured after BC3
3000 macro pulses taken

Single RF pulse

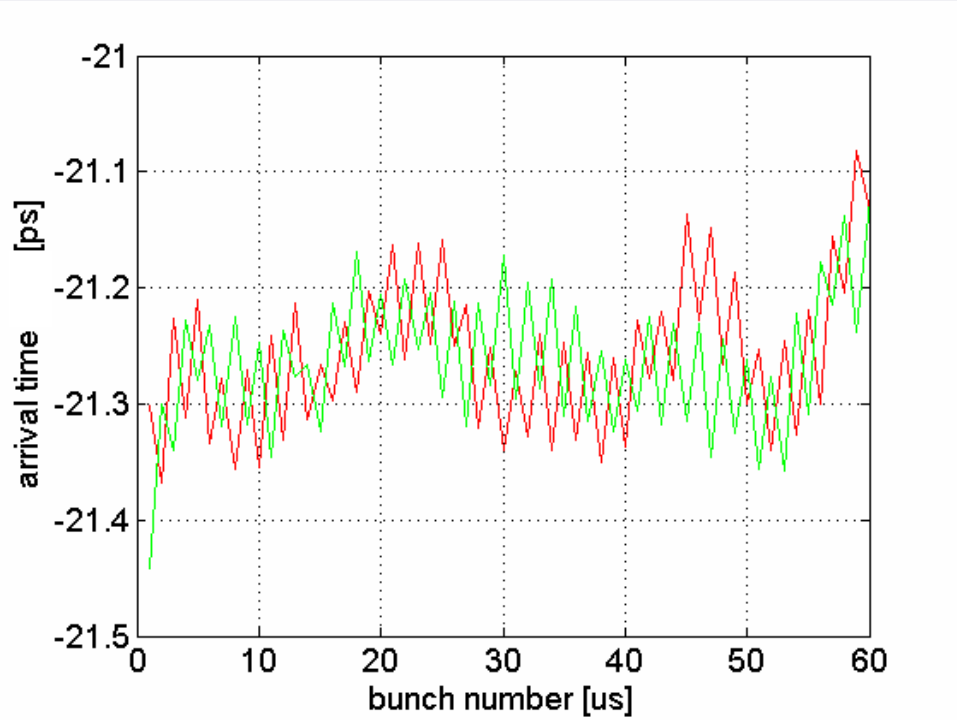

Measurement
Macro pulse arrival time jitter

No Beam Based Feedback
Learning Feed Forward ON
rms = 74 fs

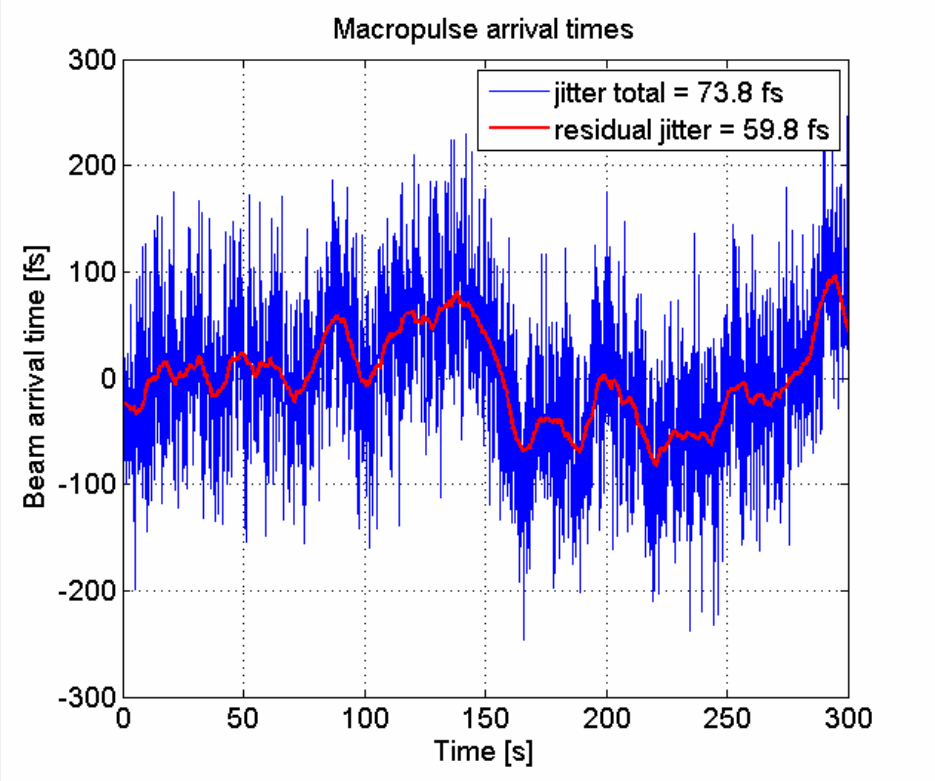

With Beam Based Feedback
running in ACC1 and ACC39
rms = 5 fs

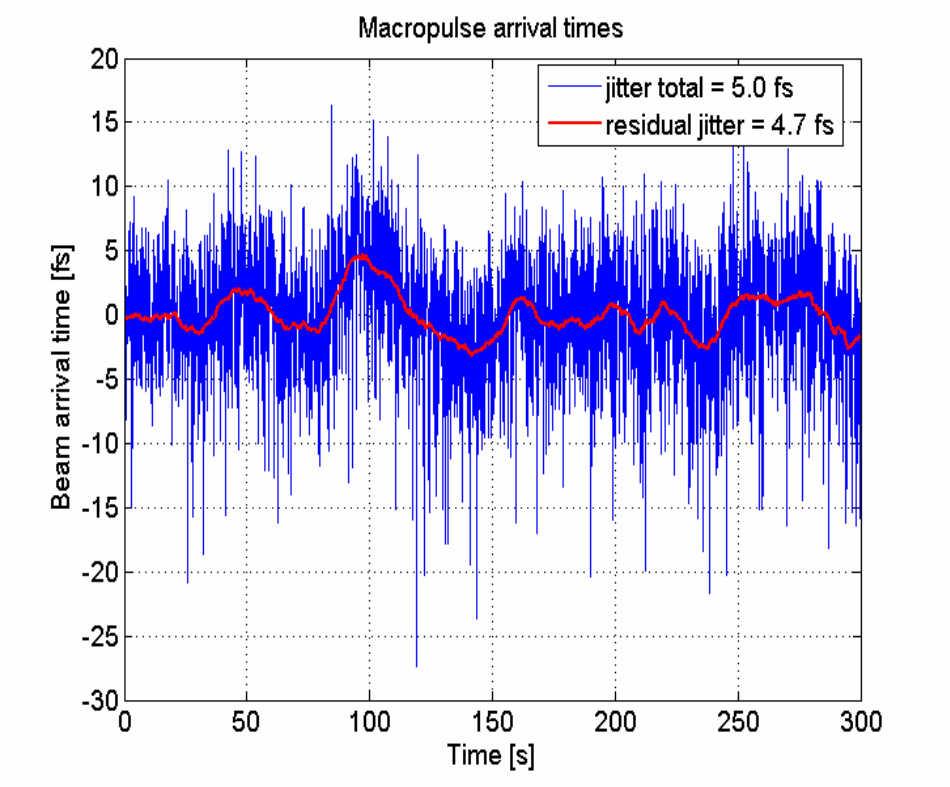

LLRF Regulation Performance → $\Delta A_1 / A_1 \sim 10e\text{-}4$

$\Delta\varphi_1 < 0.03^{O}$

• resolution of BAM ~ 10 fs for single bunch can be improved to ~ fs for macro pulse

Summary

- Commissioned interfaces between LLRF system and beam diagnostic systems
  - 3DBC2 -> ACC1 and ACC39 - OK
  - 4DBC3 -> ACC39 - OK
  - 1UBC2 -> RF-Gun – installed but not tested
- Well defined and implemented a new concept of the beam BBF in the LLRF systems
  - BBF modules acts on the set point table – no direct interference with the LLRF controller feedback loop
  - Robustness – limiters on the BBF correction signals reduce risk for increased beam losses
- Successful tests with BBF on BC2
  - Prove of the concept
  - Reduction of the intra-train bunch arrival time jitter
  - Significant reduction of pulse-pulse beam arrival time jitter
  - Reduction of the repetitive errors by Learning Feed Forward

Thank you for your attention

References:

- TUOBI2 – S. Scheriber, “FLASH upgrade and first results”
- THOA3 – M. Felber et al., “RF-based Synchronization of the Seed and Pump-Probe Lasers to the Optical Synchronization System at FLASH”
- THPA04 – P. Gessler et al., “Longitudinal Bunch Arrival-Time Feedback at FLASH”
- THPA05 – S. Schulz et al., “Performance of the FLASH Optical Synchronization System Utilizing Commercial SESAM-Based Erbium Laser”
- THPA06– P. Gessler et al., “Real-Time Sampling and Processing Hardware for Bunch Arrival Time Monitors at FLASH and XFEL”
- M. K. Bock*, M. Felber, P. Gessler, K. E. Hacker, F. Loehl, F. Ludwig, H. Schlarb, B. Schmidt, J. Zemella, DESY, Hamburg, Germany, S. Schulz, L.-G. Wissmann, University of Hamburg, Germany, “RECENT DEVELOPMENTS OF THE BUNCH ARRIVAL TIME MONITOR WITH FEMTOSECOND RESOLUTION AT FLASH”, Proceedings of IPAC’10, Kyoto, Japan
- F. Löhl, “Optical Synchronizations of a Free-Electron Laser with Femtosecond Precision”, DESY-THESIS-2009-031, 2009
- S. Schulz, Hamburg University, Germany, M. K. Bock, M. Felber, P. Gessler, K . E. Hacker, F. Ludwig, H. Schlarb, B. S chmidt, T. L amb, L.-G. Wissmann, Deutsches Elektronen-Synchrotron (DESY), Hamburg, Germany, “Performance of the FLASH Optical Synchronization System with a Commercial SESAM-Based Erbium Laser”, Proceedins of IPAC’10, Kyoto, Japan
- C. Behrens, B. Schmidt, S. Wesch† , Deutsches Elektronen-Synchrotron DESY, Hamburg, Germany, D. Nicoletti, INFN-Roma, Roma, Italy, “UPGRADE AND EVALUATION OF THE BUNCH COMPRESSION MONITOR AT THE FREE-ELECTRON LASER IN HAMBURG (FLASH)”, Proceedins of IPAC’10, Kyoto, Japan

Backup Slides

LLRF Control Tables

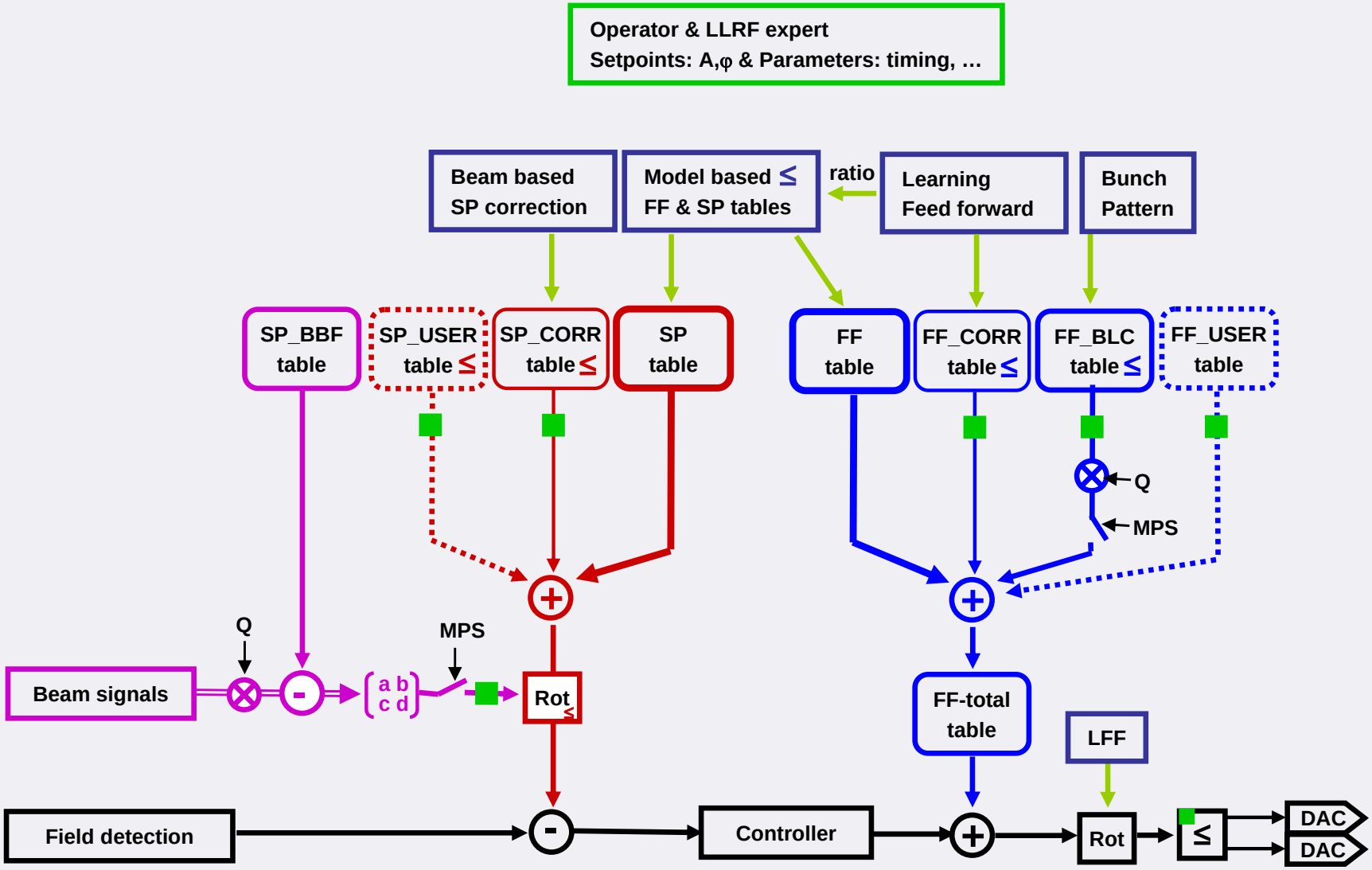

Beam Arrival Monitors
Front-end Electronics

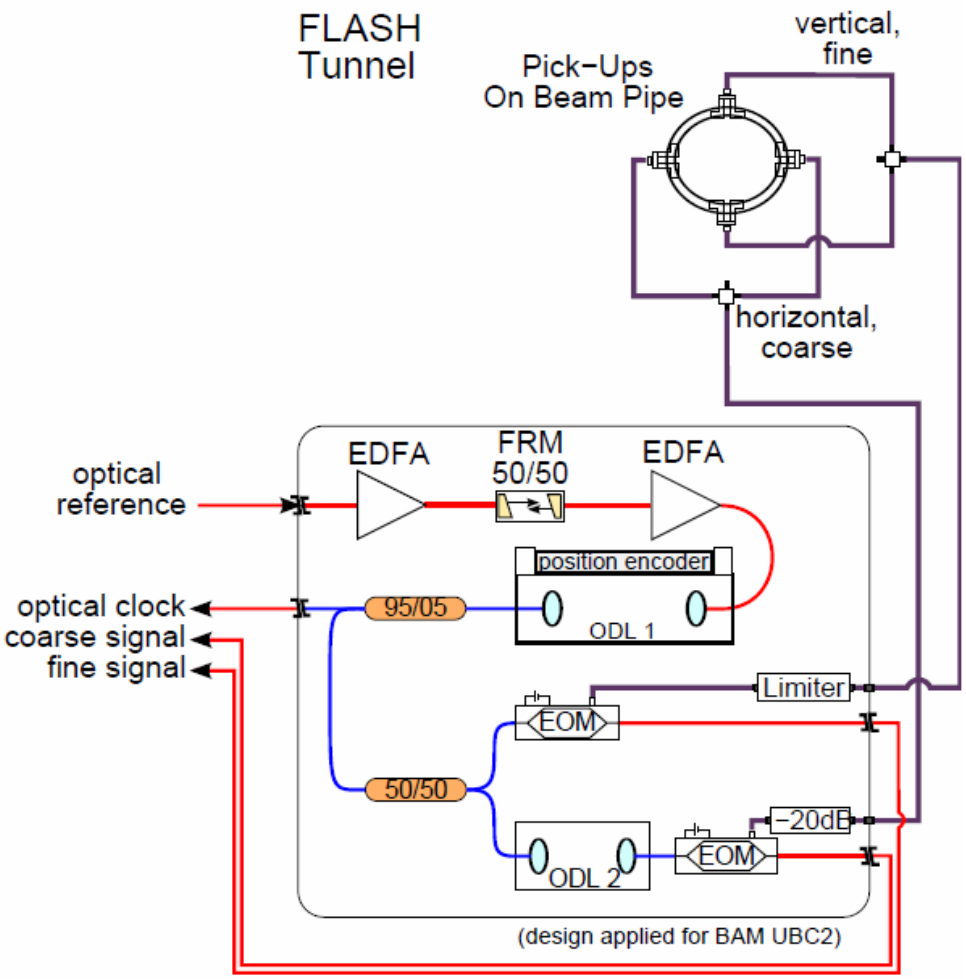

- self-spliced Polarisation Maintaing Fibre Section
- 2 Erbium-doped Fibre Amplifiers (EDFA)
- uncompensated fibre length in total: $\approx 5m$
- distance FRM - EOM 1: $\approx 3.5m$

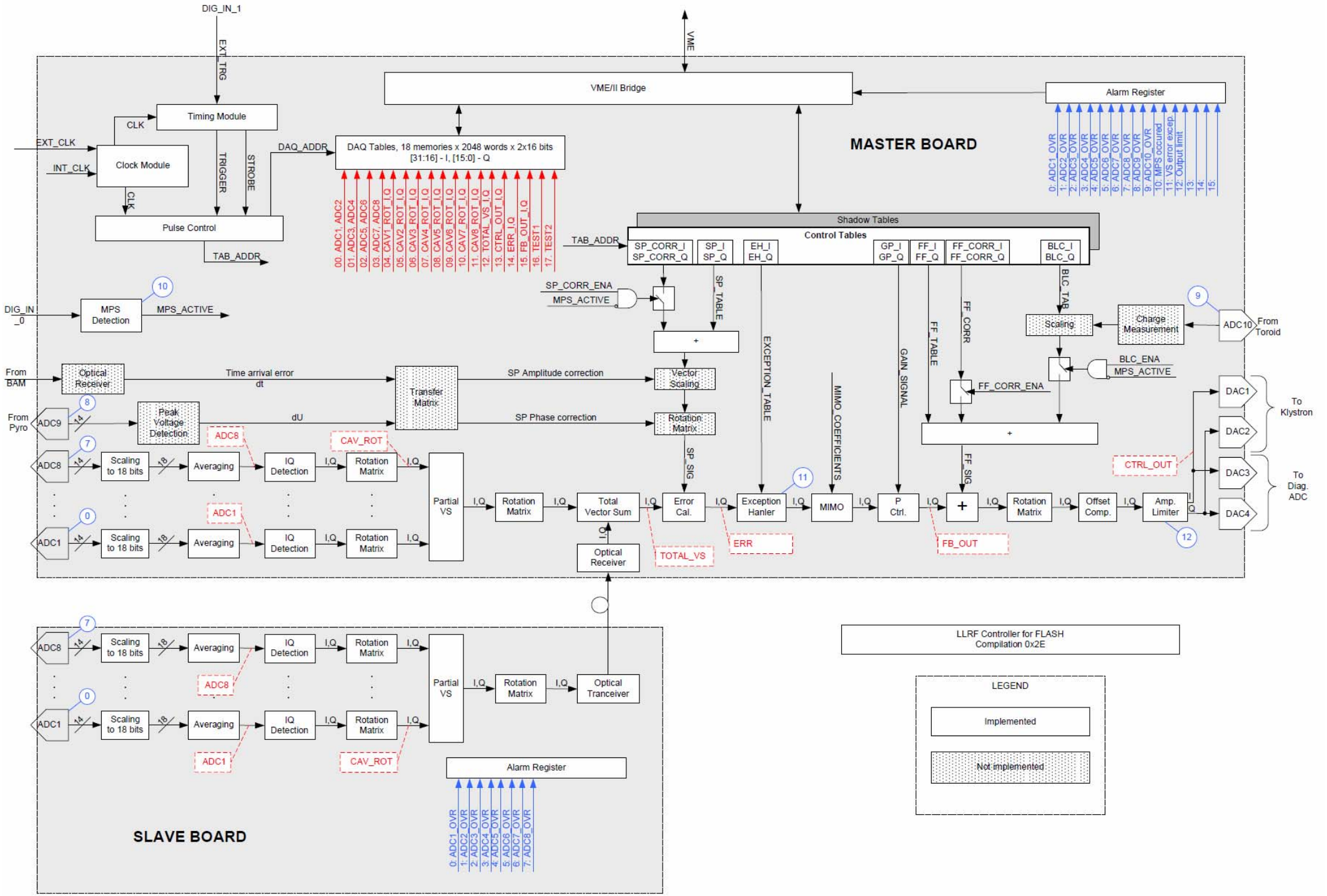
MASTER BOARD
DIG_IN_1
EXT_TRG
VME
VME/II Bridge
Alarm Register
Timing Module
CLK
EXT_CLK
INT_CLK
Clock Module
TRIGGER
STROBE
DAQ_ADDR
DAQ Tables, 18 memories x 2048 words x 2x16 bits
[31:16] - I, [15:0] - Q
Pulse Control
TAB_ADDR
Shadow Tables
Control Tables
SP_CORR_I SP_CORR_Q
SP_I SP_Q
EH_I EH_Q
GP_I GP_Q
FF_I FF_Q
FF_CORR_I FF_CORR_Q
BLC_I BLC_Q
SP_CORR_ENA
MPS_ACTIVE
SP_TABLE
EXCEPTION_TABLE
MIMO_COEFFICIENTS
GAIN_SIGNAL
FF_TABLE
FF_CORR
BLC_TAB
DIG_IN _0
MPS Detection
MPS_ACTIVE
Scaling
Charge Measurement
ADC10
From Toroid
BLC_ENA
FF_CORR_ENA
From BAM
Optical Receiver
Time arrival error
dt
Transfer Matrix
SP Amplitude correction
Vector Scaling
SP Phase correction
Rotation Matrix
From Pyro
ADC9
Peak Voltage Detection
dU
ADC8
CAV_ROT
ADC1
Scaling to 18 bits
Averaging
IQ Detection
Partial VS
Total Vector Sum
Error Cal.
Exception Hanler
MIMO
P Ctrl.
Offset Comp.
Amp. Limiter
SP_SIG
FF_SIG
CTRL_OUT
TOTAL_VS
ERR
FB_OUT
DAC1
DAC2
DAC3
DAC4
To Klystron
To Diag. ADC
SLAVE BOARD
Optical Tranceiver
LLRF Controller for FLASH
Compilation 0x2E
LEGEND
Implemented
Not implemented

timing jitter behind chicane

RF amplitude changes
FLASH: R_{56} = 180 (50) mm
XFEL: R_{56} = 100 (20) mm
LCLS: R_{56} = 36 (22) mm

RF phase changes

reduction of incoming timing jitter due to compression

$$\Sigma_t^2 \approx \left(\frac{R_{56}}{c_0}\frac{\sigma_A}{A}\right)^2 + \left(\frac{C-1}{C}\right)^2\left(\frac{\sigma_\phi}{2\pi f_{\mathrm{RF}}}\right)^2 + \left(\frac{1}{C}\right)^2\Sigma_{i,t}^2$$

RF requirements for 10 fs arrival time stability at FLASH:

phase stability	< 0.005° @ 1.3 GHz (= 10 fs)
amplitude stability	< $1.6 * 10^{-5}$

Master Laser Oscillator (MLO)

Pulse generation and distribution

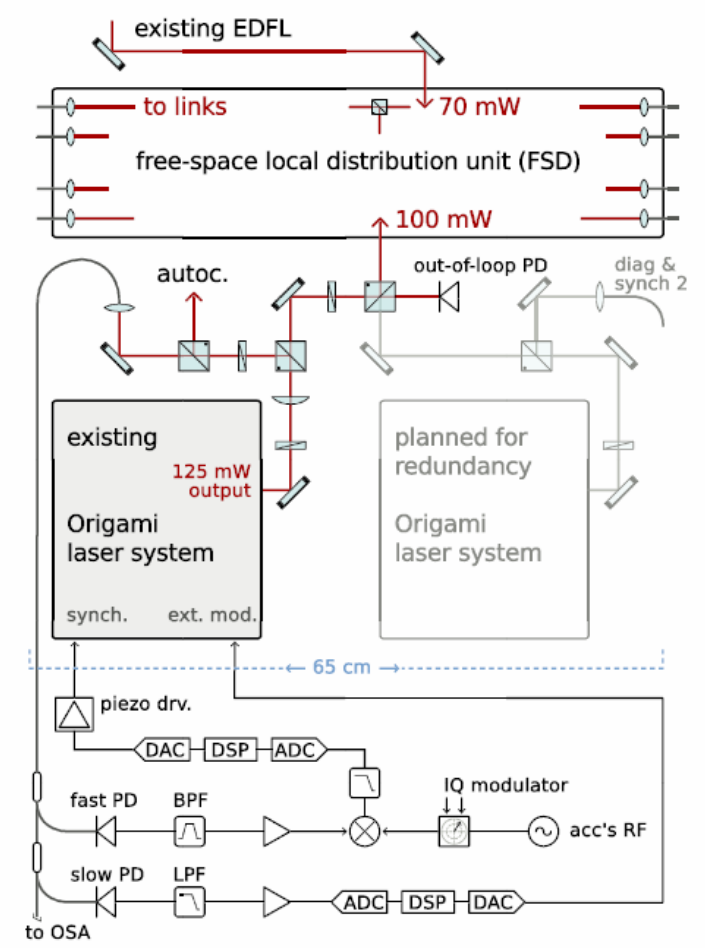

- Promising: OneFive ORIGAMI-15
- Repetition rate: 216,66MHz
- Average power: > 100mW
- Pulse duration: p < 150 fs
- Integrated timing jitter < 5 fs in the interval [1 kHz; 10MHz]
- Mechanically robust, easy to maintain

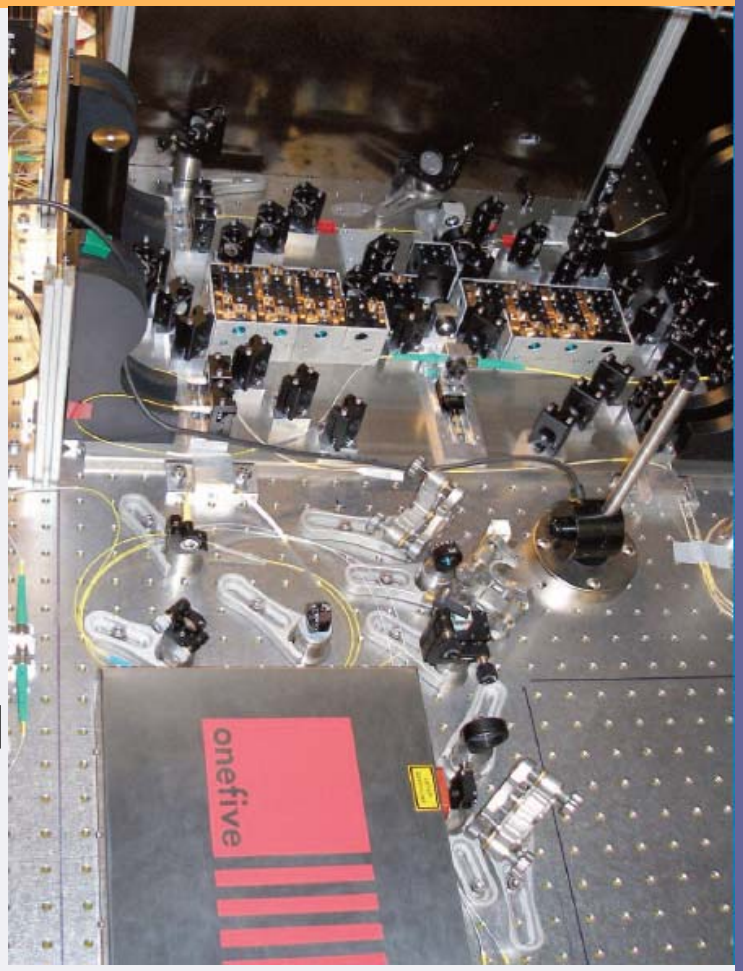

More details in poster from Sebastian Schulz THPA05

Low Level RF Control Systems

FPGA Firmware and Software Architecture

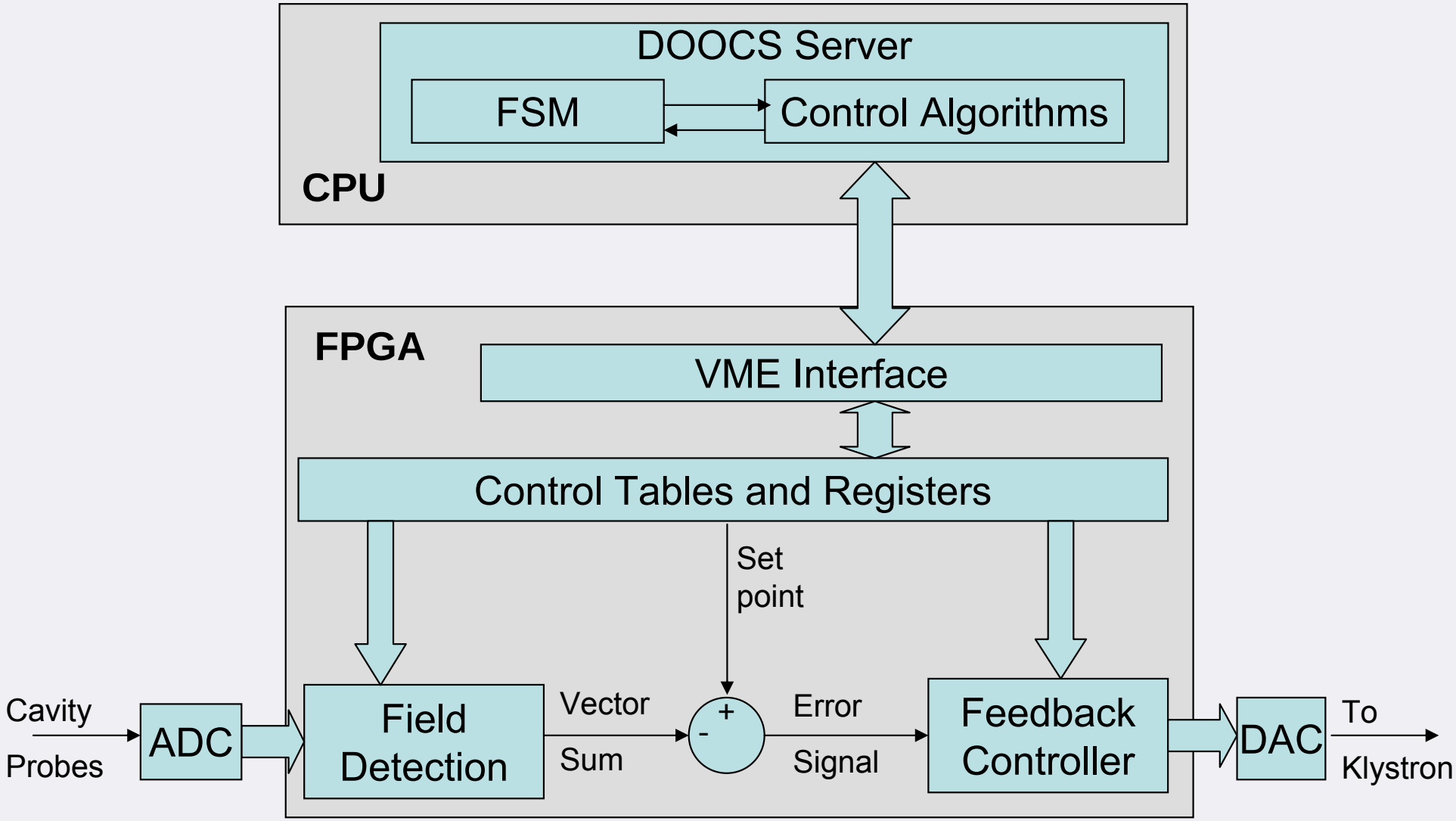

Low Level RF Control Systems

Intra-train BBF Implementation