# Re-design considerations for vacuum chamber layout of BC2 at the VUV-FEL

Christopher Gerth

# Working Group

**Main Goal: Preparation of BC2 for long bunch train operation**

Working Group has been formed:
Christopher Gerth, Oliver Grimm, Kirsten Hacker, Nils Mildner, Dirk Noelle, Holger Schlarb, Kirsten Zapfe

Documentation (e.g. meeting minutes) can be found at:
TTF elogbook: http//ttfinfo.desy.de/TTFelog
-> doc/SubSystems/Bunch Compressors/BC2

- Next meeting: 17 March 2006, 10:00 SR Bldg. 55a

# Topics

ranking

1) BPMs in BC2 are not working (1)
(bunch-resolved energy measurement → long bunch trains)

2) SR viewport only usable for bend angles > 20º (1)
(on-line energy measurement → long bunch trains)

3) (Absolute energy measurement not possible) (1)

4) Cut-off at 'short wavelengths' due to small gap height (3)

5) Alignment laser for THz beamline desired (2)

6) Collimator for high energies (required for operation with 3rd harmonic cavity) (2)

# Beam Position Measurements

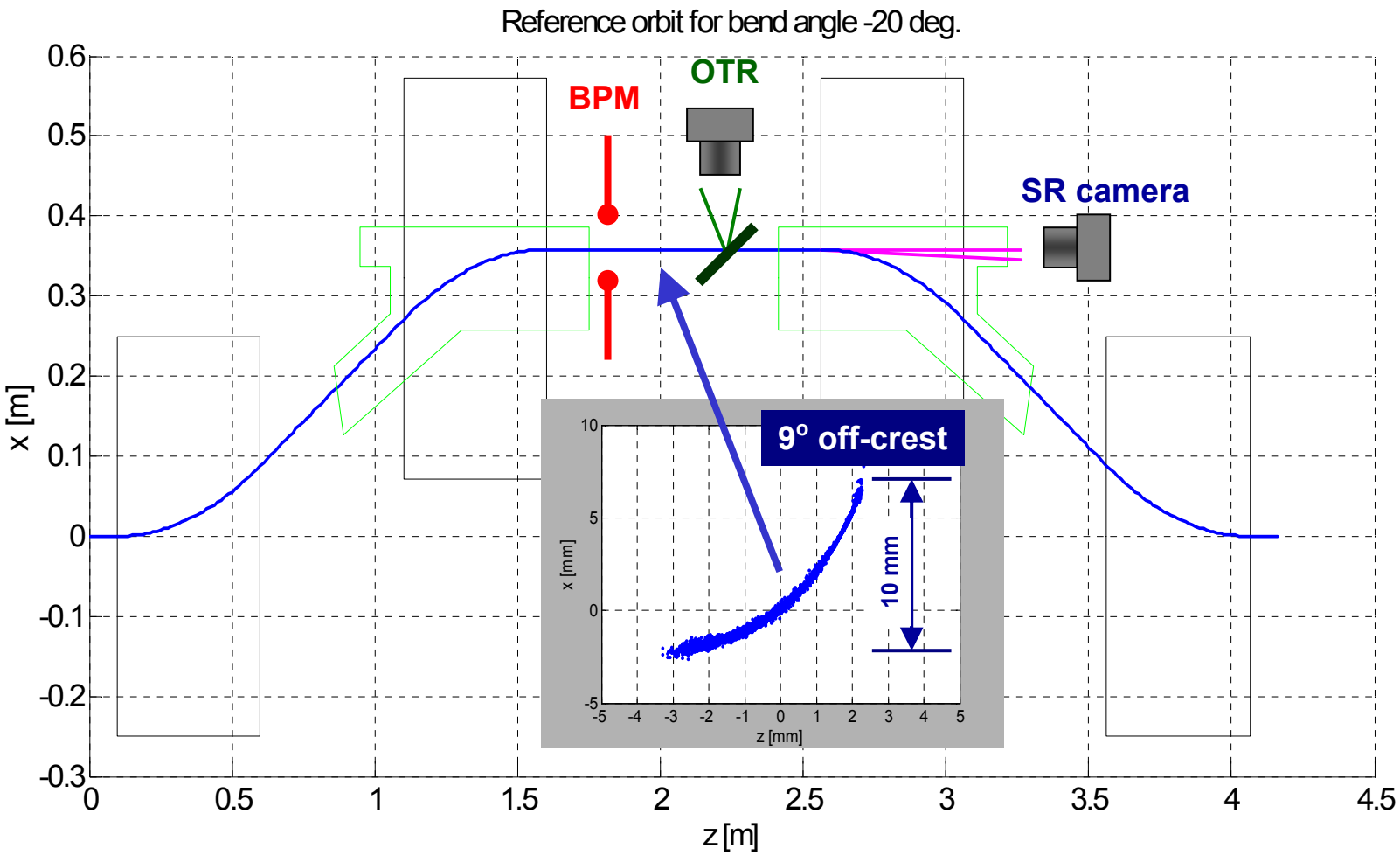


Horizontal position of the electron beam is related to the beam energy

$x = R_{16} * \Delta E/E$ $\quad$ ($x = 10$ mm $\cong \Delta E/E = 3\%$)

# 1) Pick-up BPMs BC2

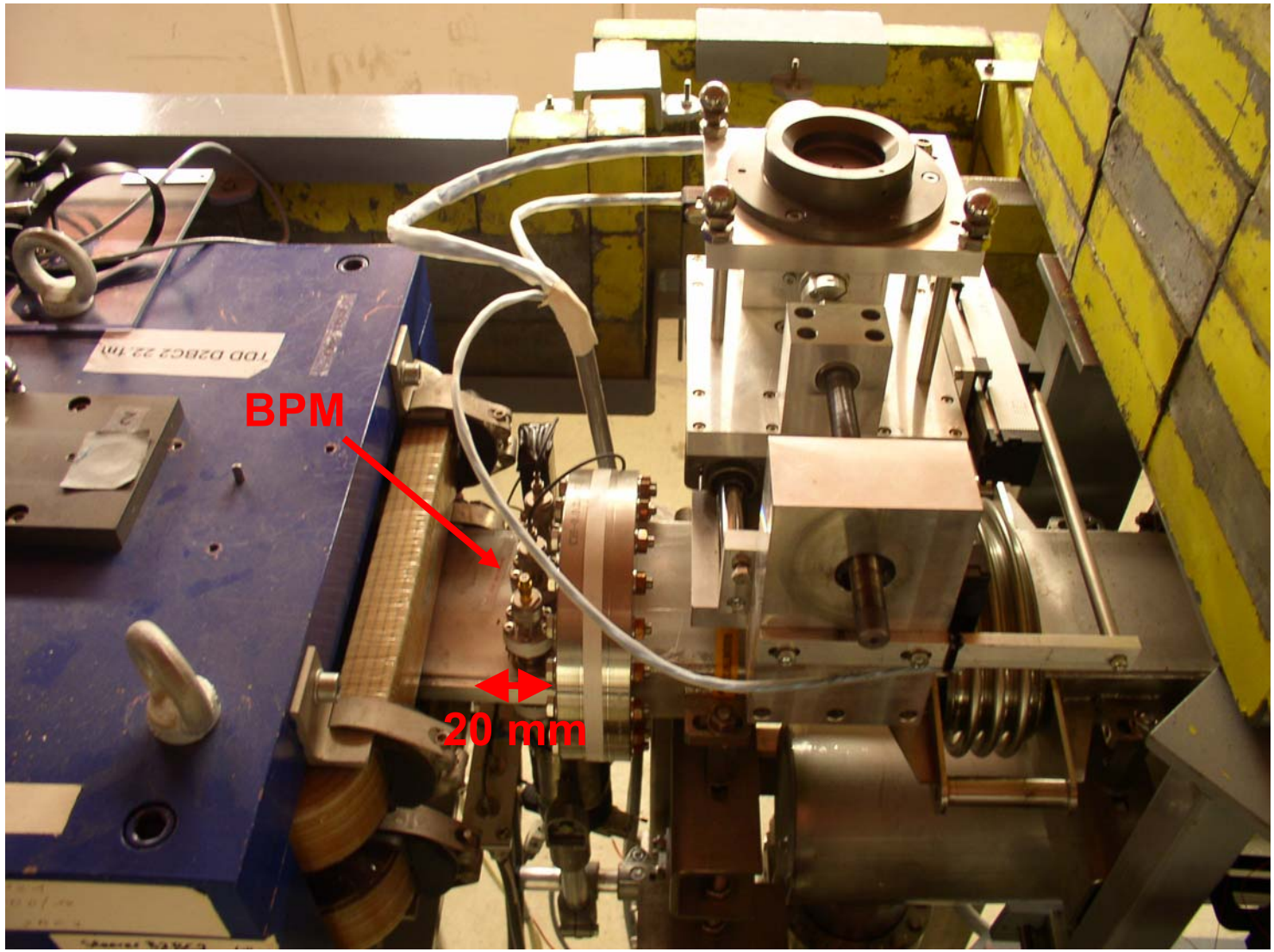

# 1) Stripline design BPM

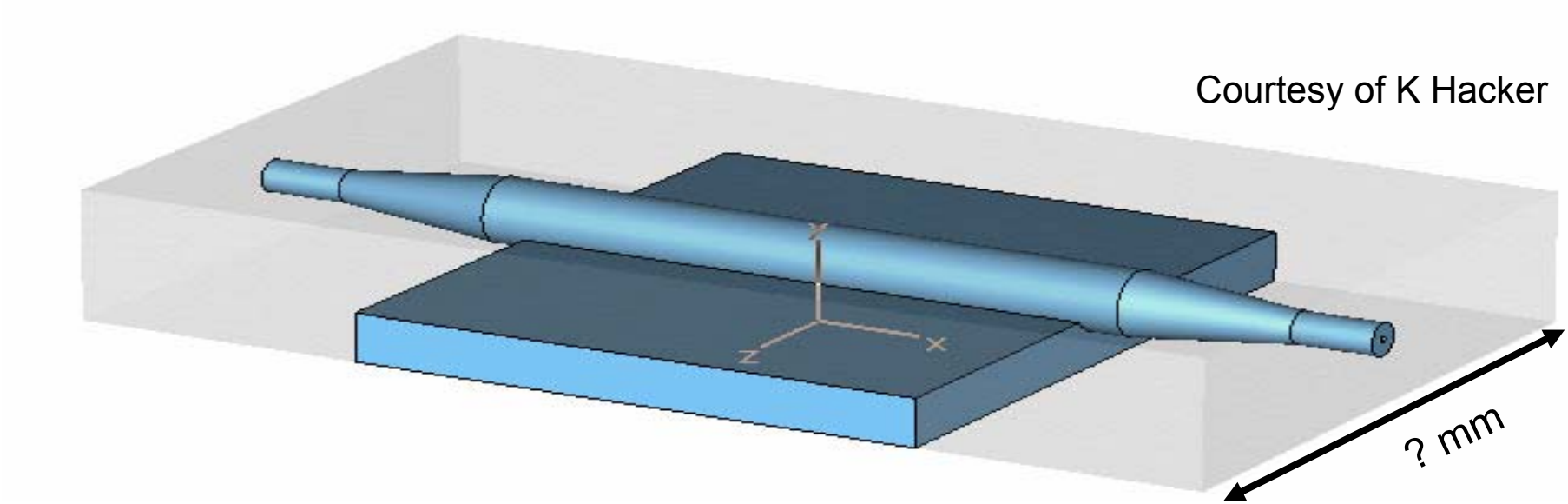


- Perpendicular Stripline
  - Beam induced Signal travels to both Sides of the Antenna
  - Arrival time difference is proportional to the Position of the Beam
  - Required Accuracy 10-20 µm @ a Beam Size of 1000 µ

Idea: Same design as for BC3?
- Vacuum chamber cross section smaller than for BC3
- Available length smaller than for BC3 (230 mm)

# 2) Set-up SR camera

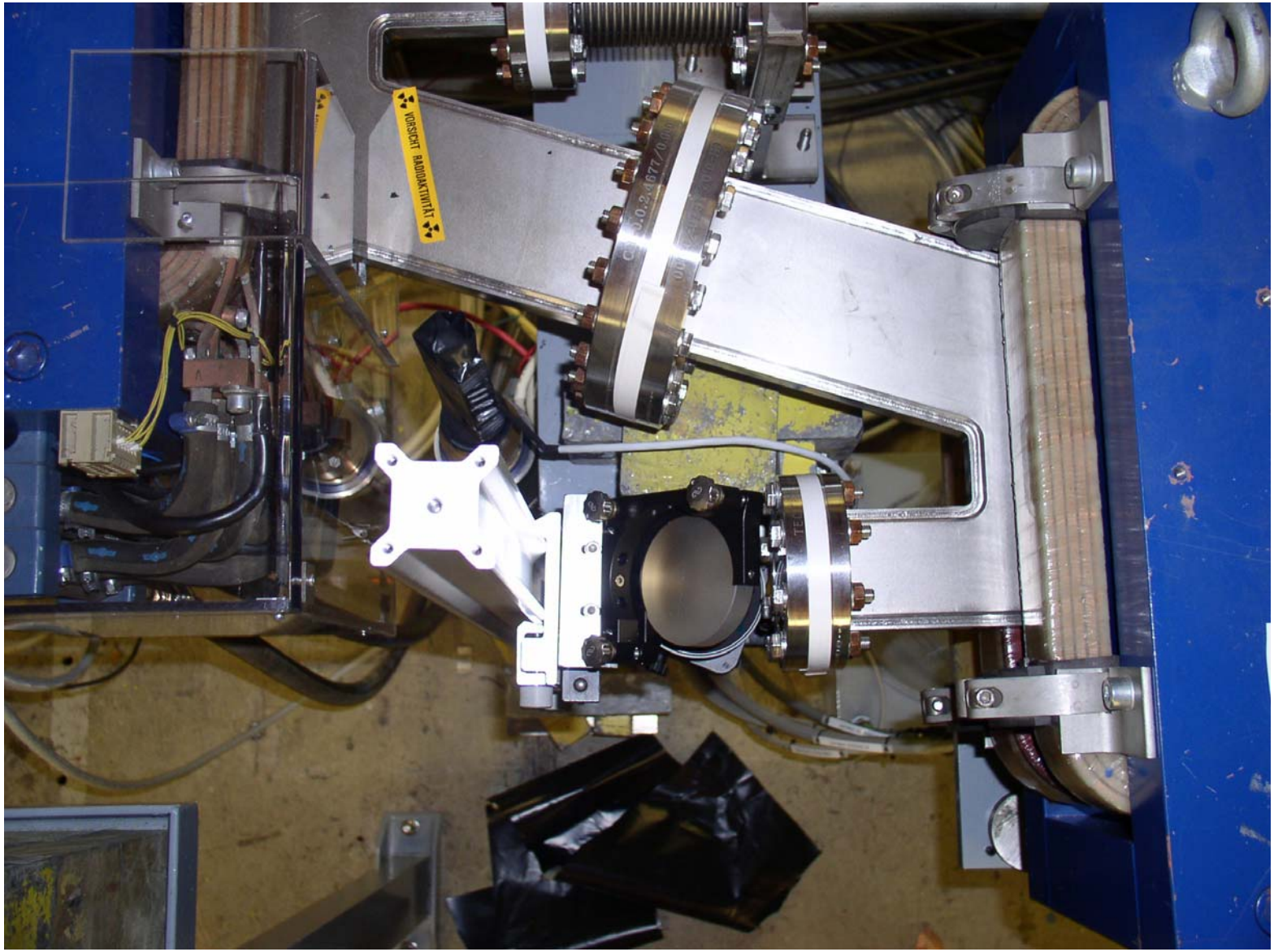

# 2) SR camera

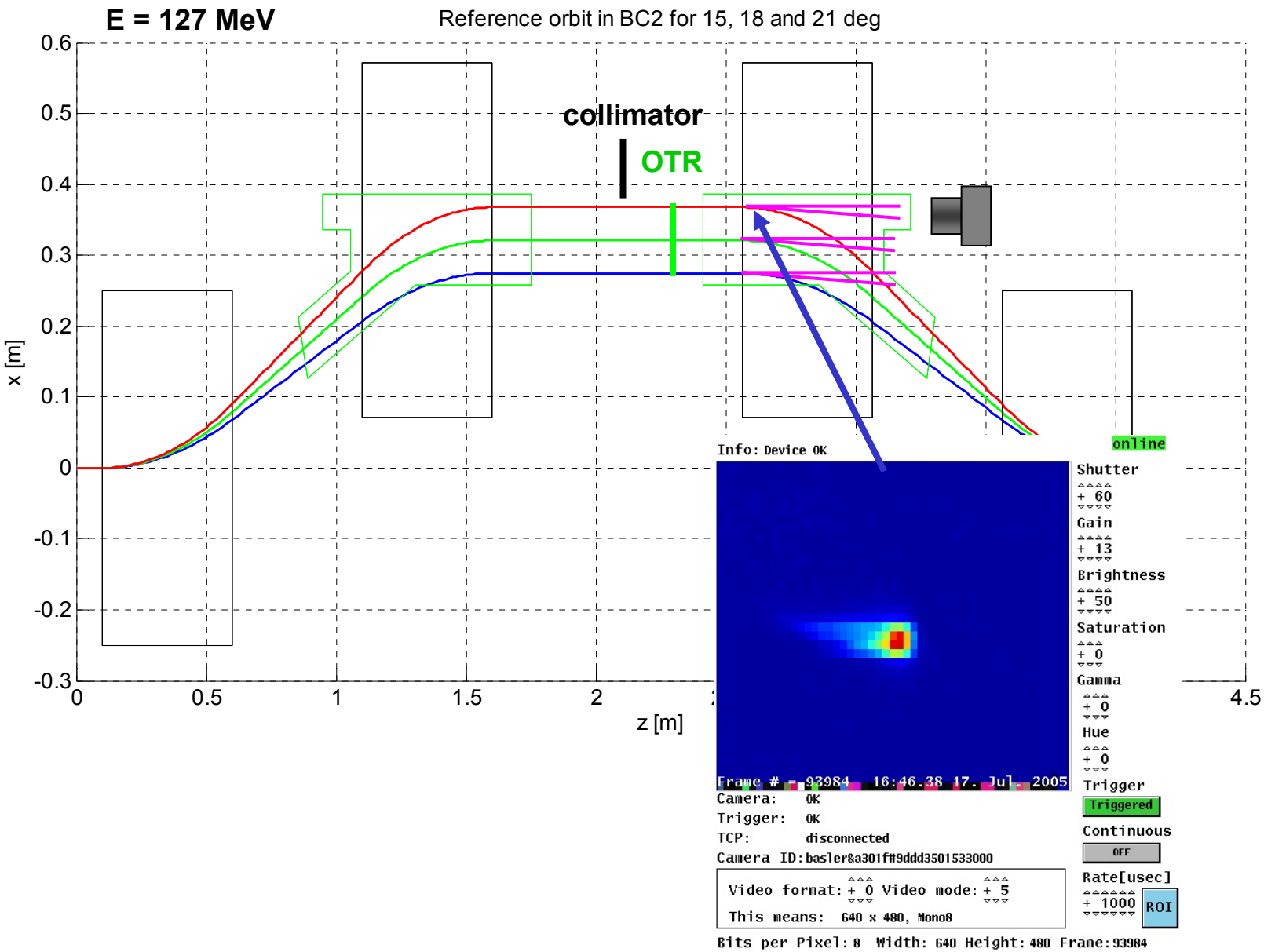
E = 127 MeV
Reference orbit in BC2 for 15, 18 and 21 deg
collimator
OTR
x [m]
z [m]
0.6
0.5
0.4
0.3
0.2
0.1
0
-0.1
-0.2
-0.3
0
0.5
1
1.5
2
4.5
Info: Device OK
online
Shutter
+ 60
Gain
+ 13
Brightness
+ 50
Saturation
+ 0
Gamma
+ 0
Hue
+ 0
Trigger
Triggered
Continuous
OFF
Rate[usec]
+ 1000
ROI
Frame # = 93984 16:46.38 17. Jul. 2005
Camera: OK
Trigger: OK
TCP: disconnected
Camera ID: basler&a301f#9ddd3501533000
Video format: + 0 Video mode: + 5
This means: 640 x 480, Mono8
Bits per Pixel: 8 Width: 640 Height: 480 Frame: 93984

# 2) First Test Measurements

9° off-crest

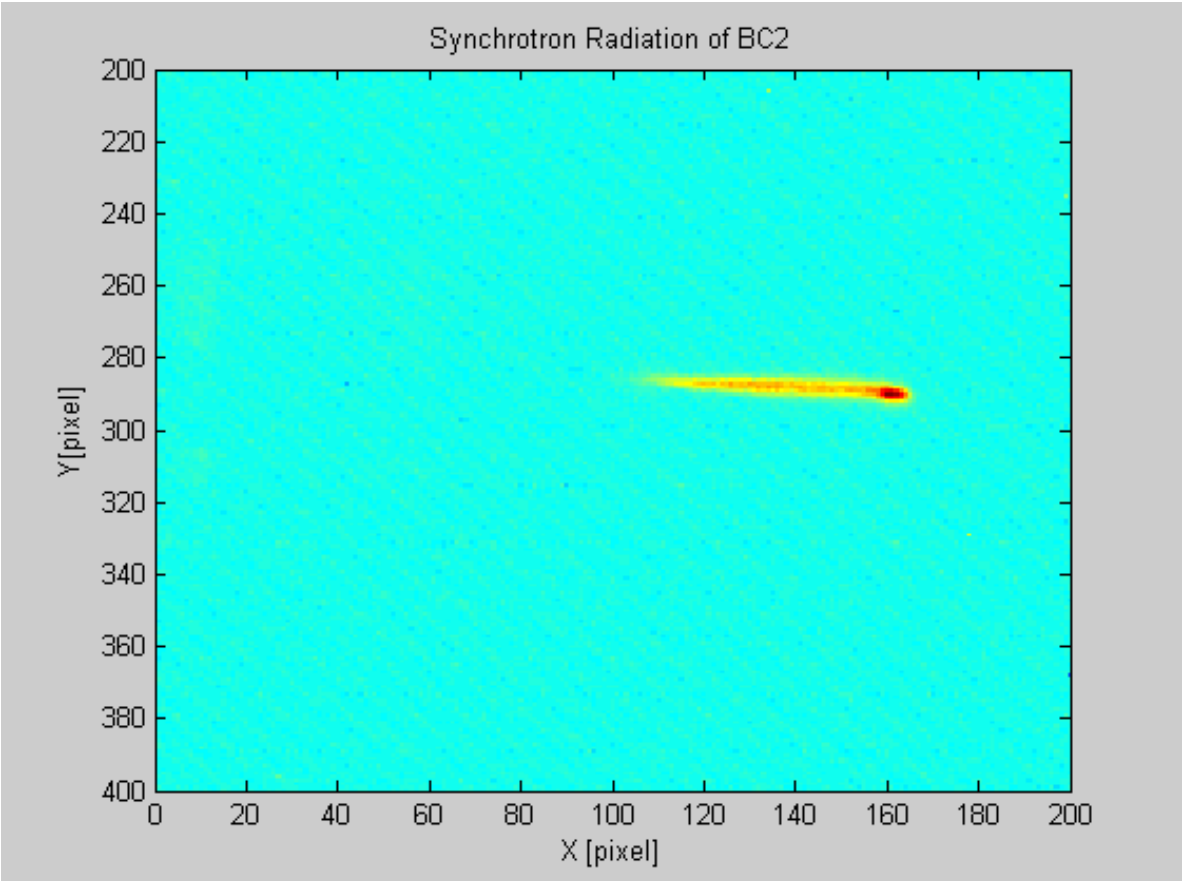

# 2) Energy/Phase Jitter ACC1 (SR camera)

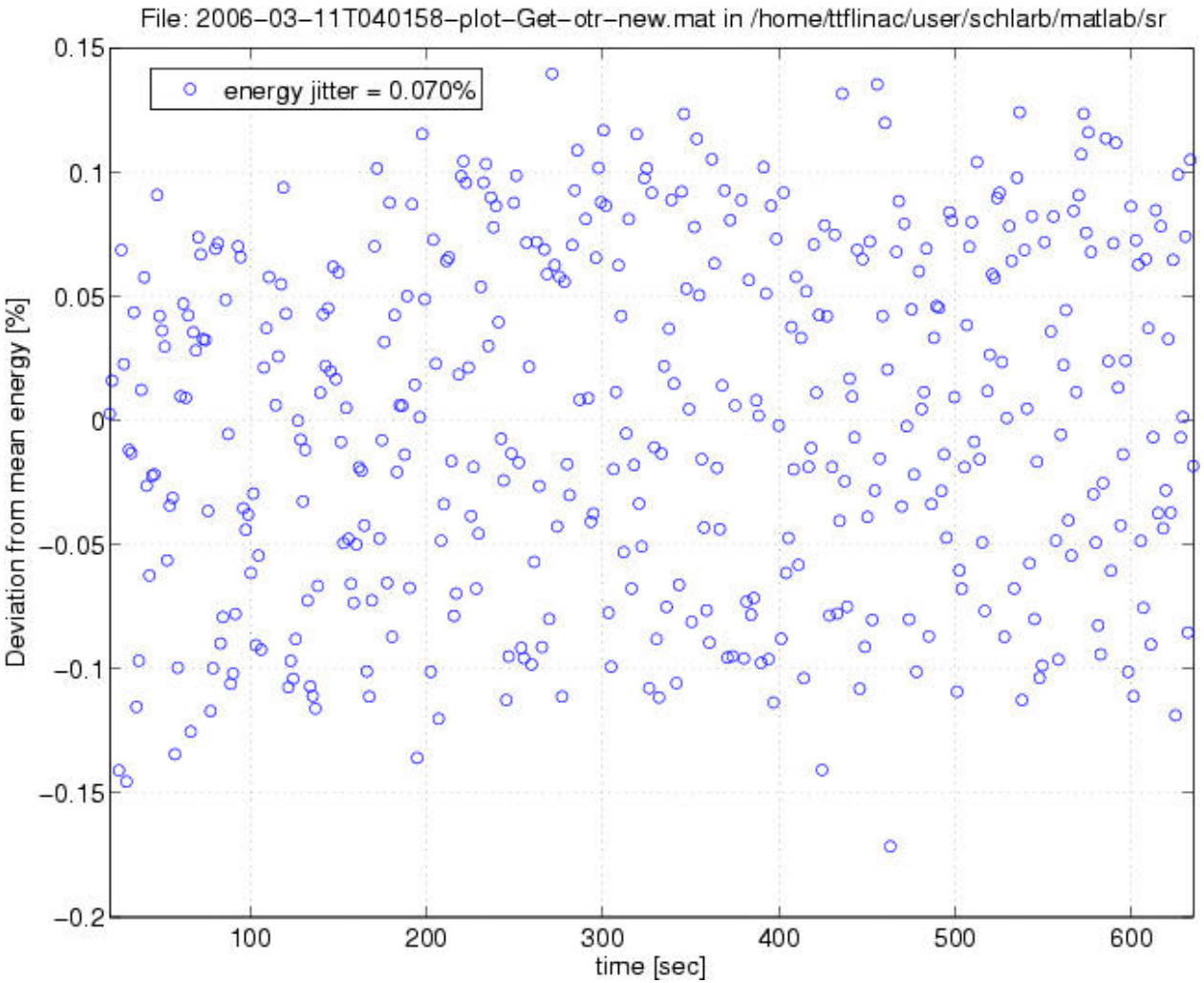

# 2) Phase Scan SR camera

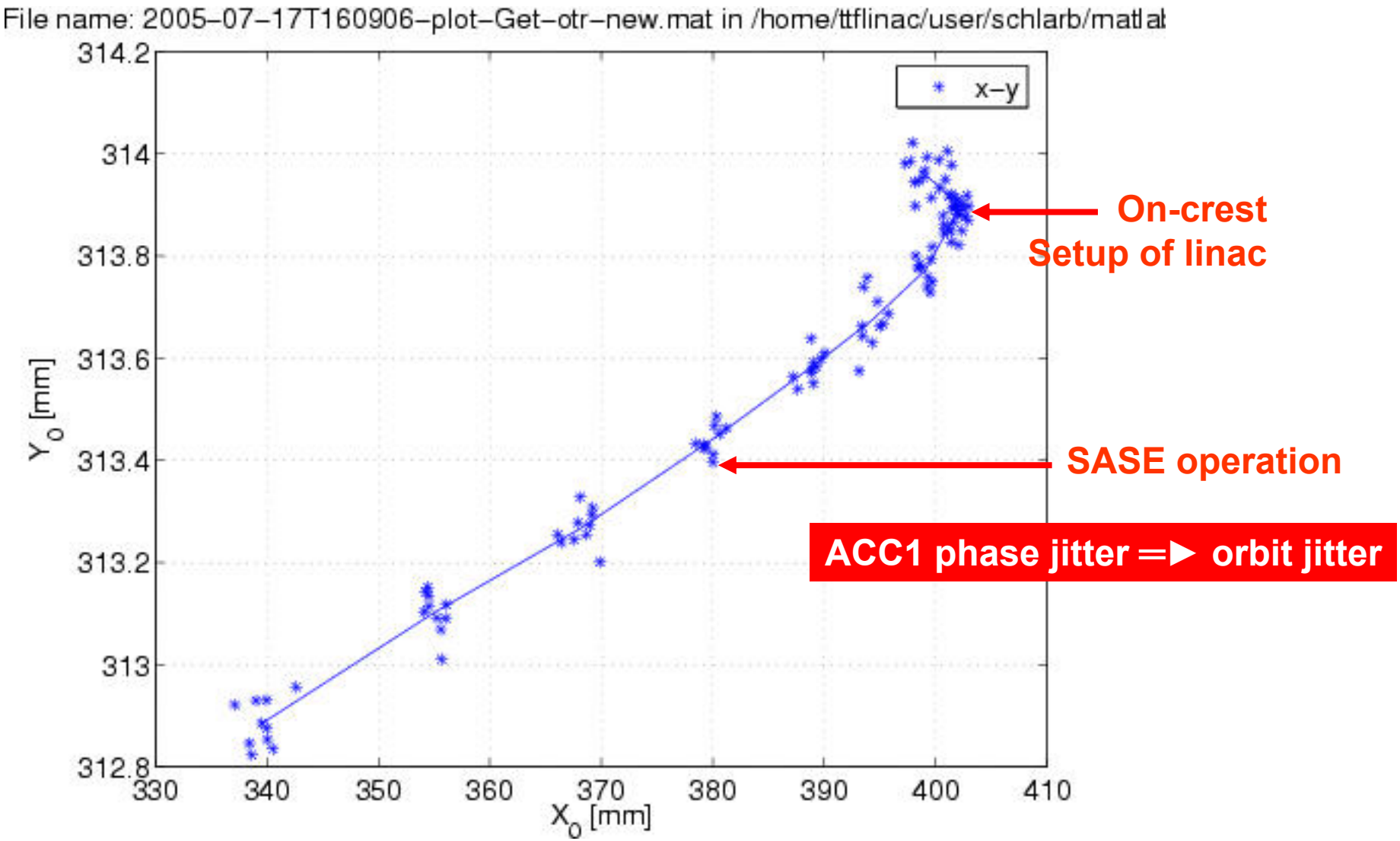

# 2) Layout SR port

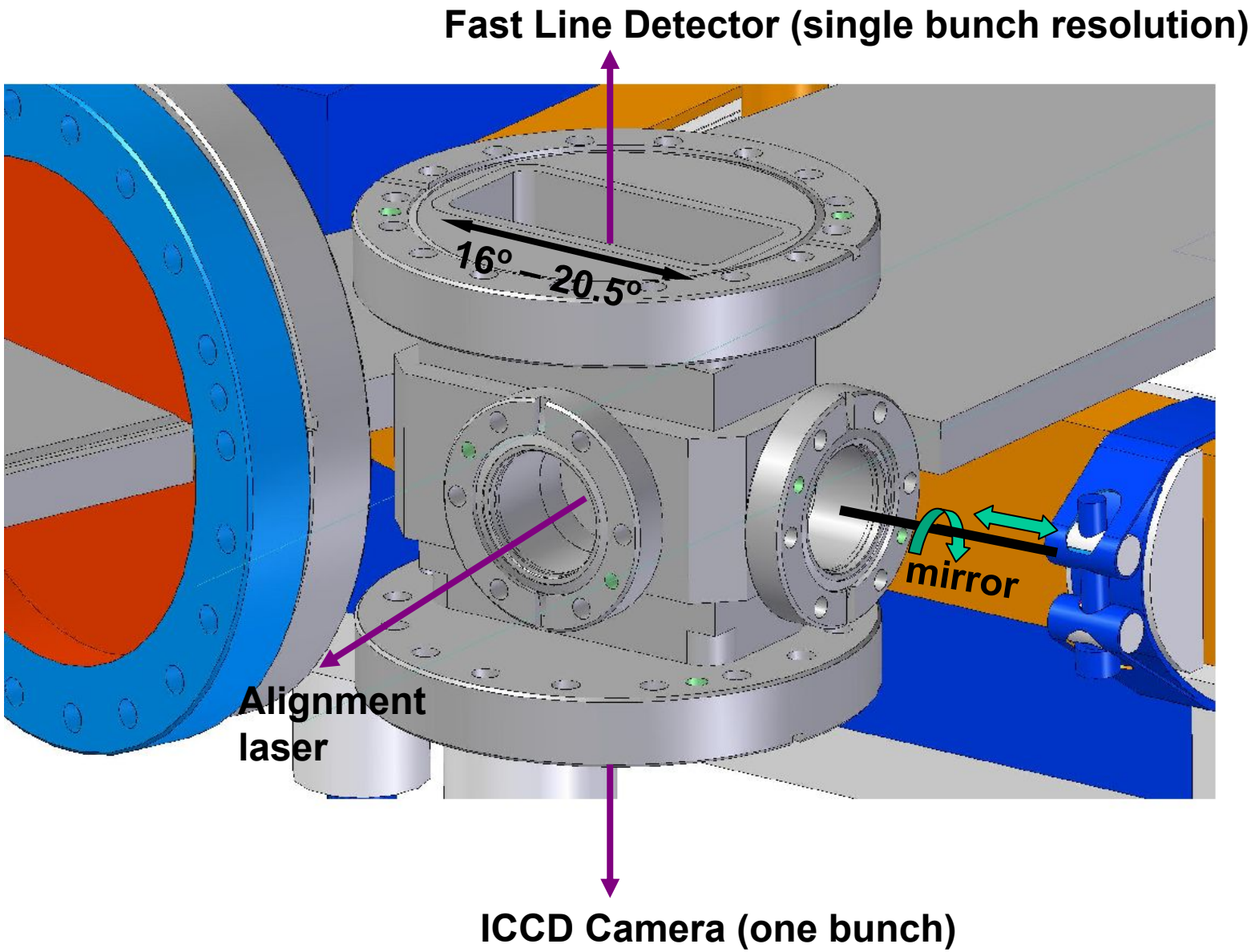

# 4) THz Wavelength Cut-off

Courtesy of O Grimm

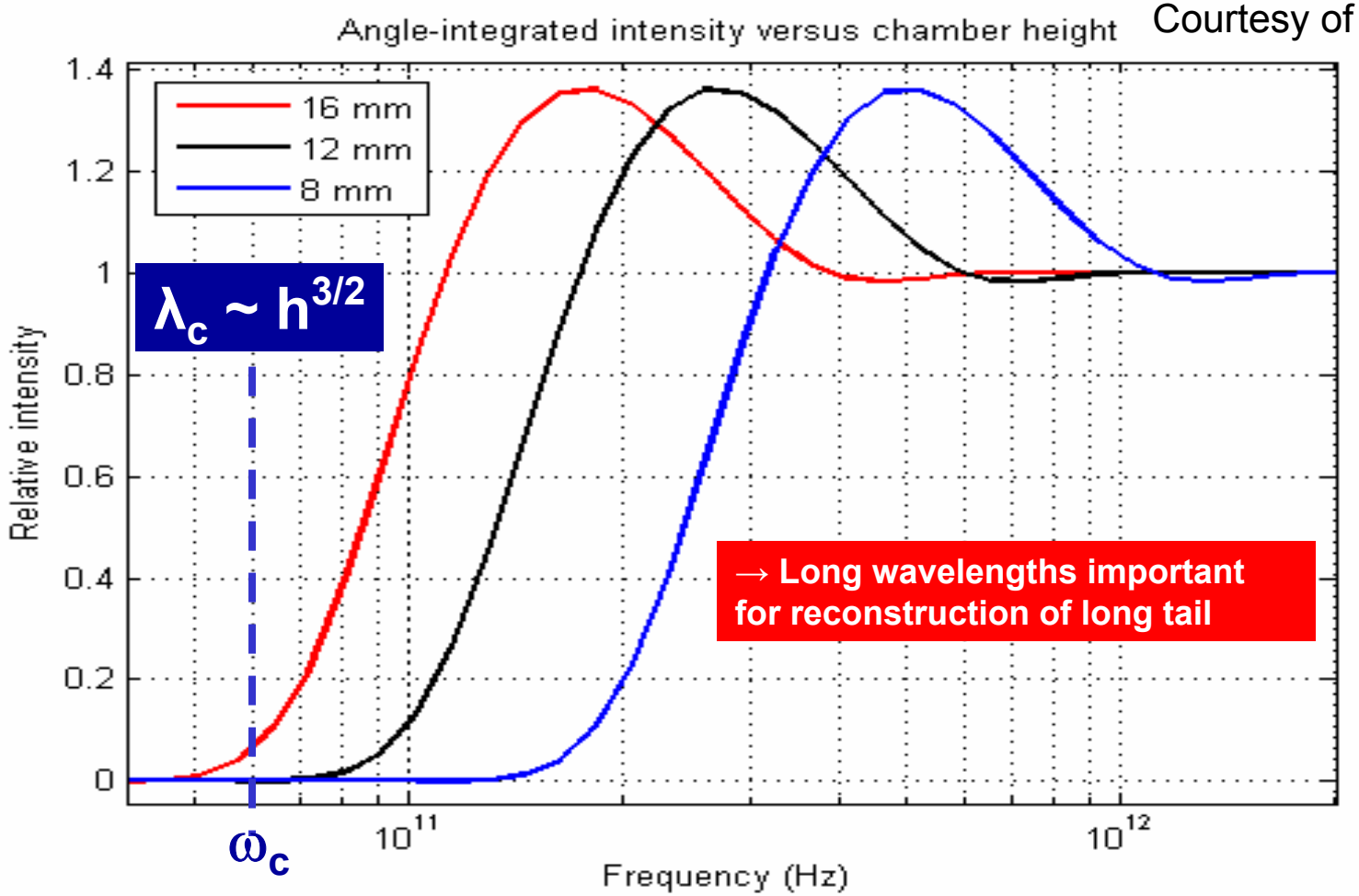


General conflict:
- Small gap to suppress CSR effects
+ Large gap to extract long wavelengths for diagnostics
+ Large gap to reduce resistive wall wakefield effects

# 4) THz Wavelength Cut-off

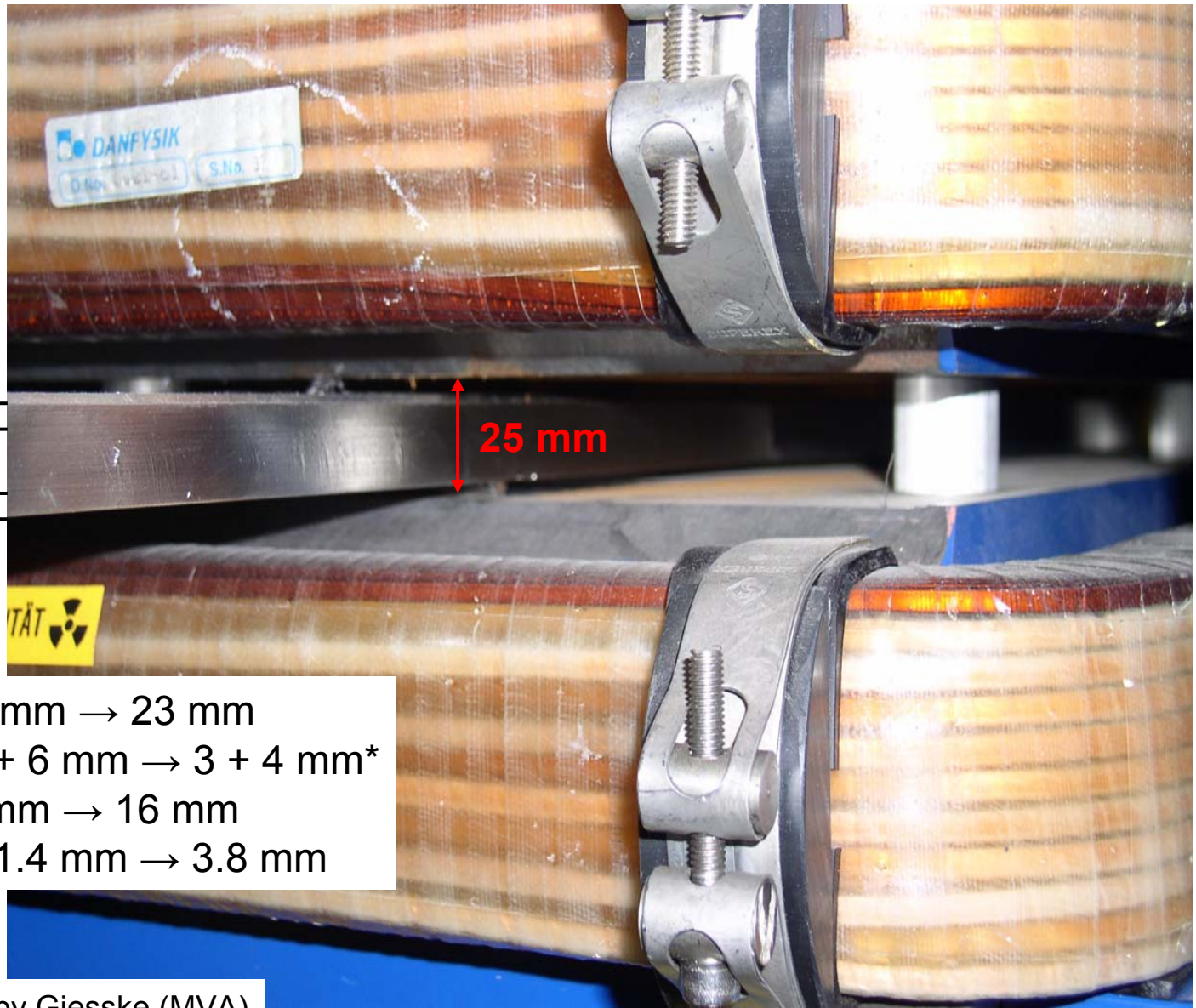


Chamber height: 19mm → 23 mm
Wall thickness : 5 + 6 mm → 3 + 4 mm*
Gap Height : 8mm → 16 mm
Cut-off wavelength: 1.4 mm → 3.8 mm

* Under study by Giesske (MVA)

# New Layout Vacuum Chamber Dipole 3

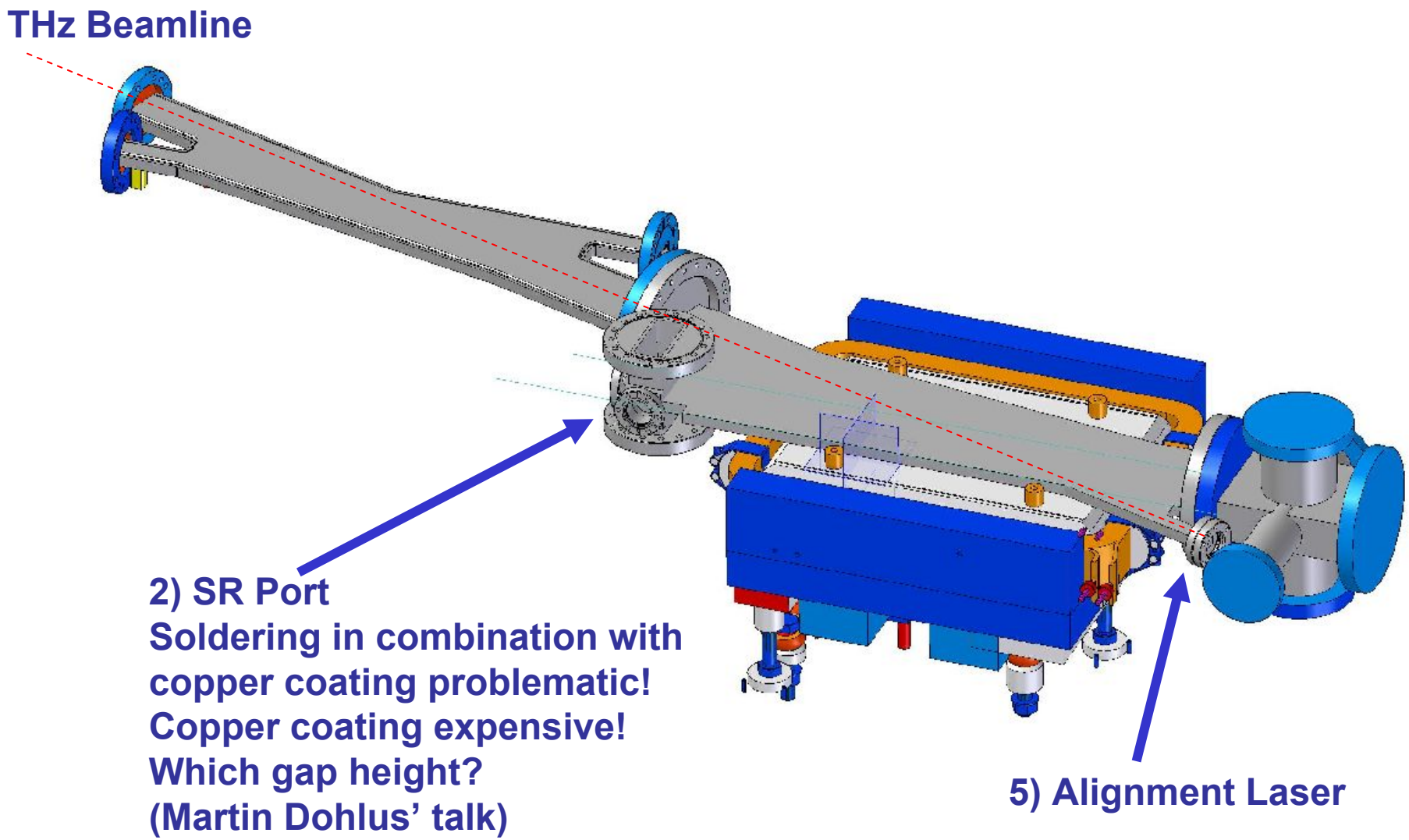

# 6) Collimator

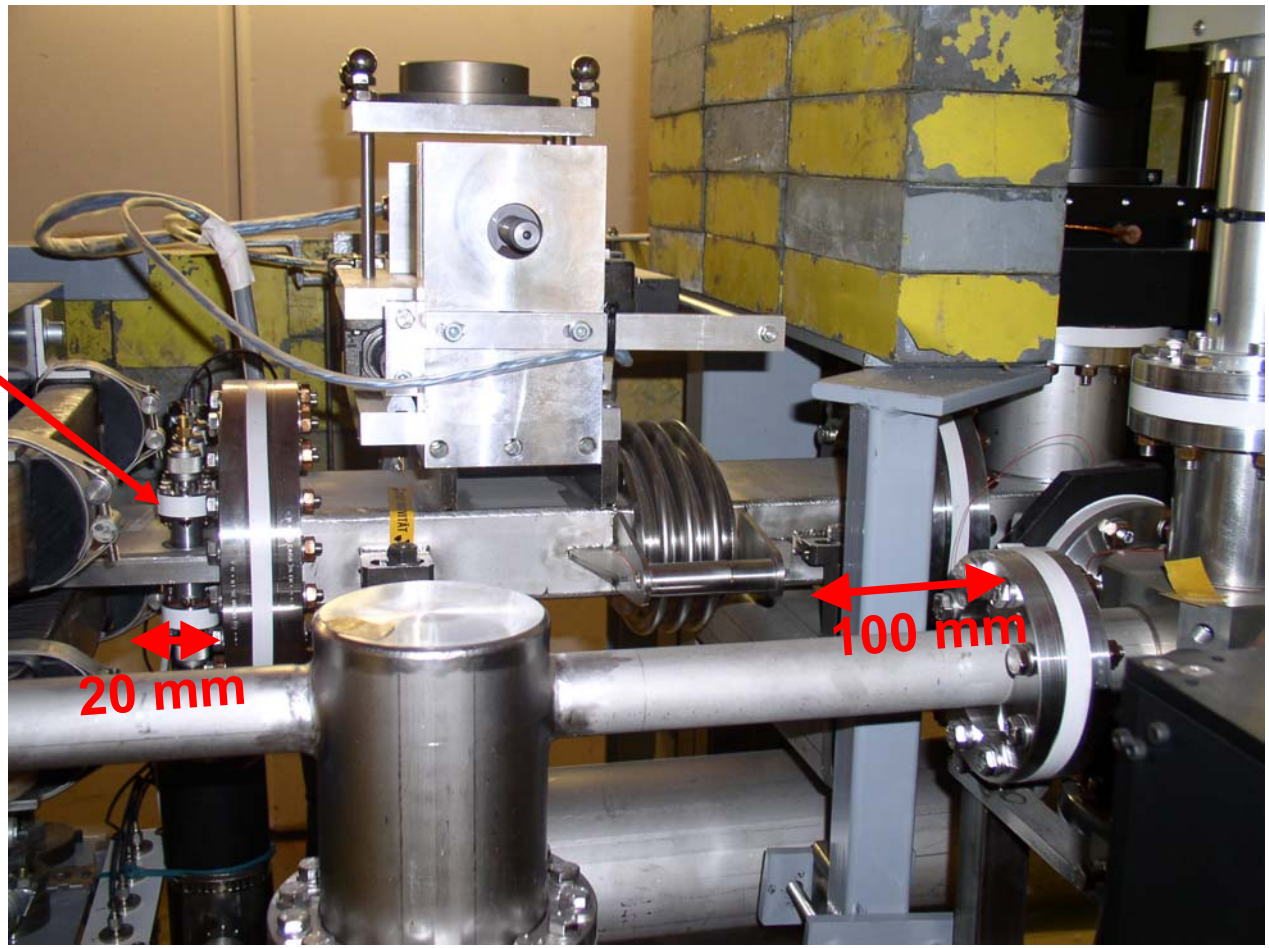


- Step 1: One could gain 140 mm by shortening dipole 2 and 3 chambers and collimator.
- Radiation dose at surface (A. Leuschner): 25 µSv/h (machining is not a) problem
- Collimator with two baffles important only after installation of 3rd harmonic cavity (July 2007)
- Step 2: Neat design which does not take up more space! Maybe combined with OTR

# Time Table

| | | | | |
|---|---|---|---|---|
| April | 13 | 27.Mar - 2.Apr | | |
| | 14 | 3.Apr - 9.Apr | | |
| | 15 | 10.Apr - 16.Apr | maintenance | |
| | 16 | 17.Apr - 23.Apr | VUV-FEL Study | |
| | 17 | 24.Apr - 30.Apr | | |
| May | 18 | 1.May - 7.May | VUV-FEL SASE Study | |
| | 19 | 8.May - 14.May | User Experiments | |
| | 20 | 15.May - 21.May | | |
| | 21 | 22.May - 28.May | | |
| June | 22 | 29.May - 4.Jun | | |
| | 23 | 5.Jun - 11.Jun | VUV-FEL Study | |
| | 24 | 12.Jun - 18.Jun | | |
| | 25 | 19.Jun - 25.Jun | VUV-FEL SASE Study | lasing at 12-15 nm |
| | 26 | 26.Jun - 2.Jul | User Experiments | |
| July | 27 | 3.Jul - 9.Jul | | |
| | 28 | 10.Jul - 16.Jul | | |
| | 29 | 17.Jul - 23.Jul | | |
| | 30 | 24.Jul - 30.Jul | maintenance | |
| August | 31 | 31.Jul - 6.Aug | | |
| | 32 | 7.Aug - 13.Aug | Accelerator Studies | |
| | 33 | 14.Aug - 20.Aug | | |
| | 34 | 21.Aug - 27.Aug | | |
| Septembe | 35 | 28.Aug - 3.Sep | | |
| | 36 | 4.Sep - 10.Sep | VUV-FEL Study | |
| | 37 | 11.Sep - 17.Sep | | |
| | 38 | 18.Sep - 24.Sep | VUV-FEL SASE Study | variation of wavelength on shift by shift bases |
| | 39 | 25.Sep - 1.Oct | User Experiments | |
| October | 40 | 2.Oct - 8.Oct | | |
| | 41 | 9.Oct - 15.Oct | | |
| | 42 | 16.Oct - 22.Oct | | |
| | 43 | 23.Oct - 29.Oct | VUV-FEL Study | |
| November | 44 | 30.Oct - 5.Nov | | |
| | 45 | 6.Nov - 12.Nov | VUV-FEL SASE Study | li |
| | 46 | 13.Nov - 19.Nov | User Experiments | |
| | 47 | 20.Nov - 26.Nov | | |
| December | 48 | 27.Nov - 3.Dec | | |
| | 49 | 4.Dec - 10.Dec | | |
| | 50 | 11.Dec - 17.Dec | Accelerator Studies | |
| | 51 | 18.Dec - 24.Dec | | |
| | 52 | 25.Dec - 31.Dec | maintenance | |
| January | 1 | 1.Jan - 7.Jan | maintenance | |
| | 2 | 8.Jan - 14.Jan | Accelerator Studies | |
| | 3 | 15.Jan - 21.Jan | | |
| | 4 | 22.Jan - 28.Jan | VUV-FEL Study | |
| February | 5 | 29.Jan - 4.Feb | | |
| | 6 | 5.Feb - 11.Feb | VUV-FEL SASE Study | |
| | 7 | 12.Feb - 18.Feb | User Experiments | |
| | 8 | 19.Feb - 25.Feb | | |
| | 9 | 26.Feb - 4.Mar | | |
| March | 10 | 5.Mar - 11.Mar | | |
| | 11 | 12.Mar - 18.Mar | Shutdown | |
| | 12 | 19.Mar - 25.Mar | modules + 3.9 | |
| | 13 | 26.Mar - 1.Apr | | |
| April | 14 | 2.Apr - 8.Apr | | |
| | 15 | 9.Apr - 15.Apr | | |
| | 16 | 16.Apr - 22.Apr | | |
| | 17 | 23.Apr - 29.Apr | | |
| May | 18 | 30.Apr - 6.May | | |
| | 19 | 7.May - 13.May | | |
| | 20 | 14.May - 20.May | | |
| | 21 | 21.May - 27.May | | |
| June | 22 | 28.May - 3.Jun | | |
| | 23 | 4.Jun - 10.Jun | | |
| | 24 | 11.Jun - 17.Jun | | |
| | 25 | 18.Jun - 24.Jun | | |
| | 26 | 25.Jun - 1.Jul | | |

?

**Step 1: new vacuum chambers dipole 2 and 3 (and 4), shortened collimator, prototype BPM**
**'required' for lasing with long pulse trains**
**However shutdown too early (6 months preparation time) and too short (3 weeks)**

**Milestone: Lasing with long pulse trains**

**Step 2: new collimator design (two scapers), final BPM design.**

# Summary

Main decisions to be made:
Copper coating of vacuum chambers Yes/No
Gap height, wall thickness height?

Find time slot for installation?