Laser-Based Synchronisation & BAMs

Marie Kristin Czwalinna,
on behalf of the LbSync-Team

FEL Seminar

03. May 2016

What You Can Expect From This Talk...

People Involved...

- Laser-Based Synchronisation & Special Diagnostics: (alphabetic order)
  Dinter, Felber, Janaz, Gerth, Kozak, Lamb, Me, Müller, Predki, Sydlo, Steffen, Titberidze, Viti, Zummack
- Support for HW :
  Fenner, Ludwig, Przygoda, Wedel ..
- Support for FW:
  Butkowski, Kay, Rybaniec, ..
- Support in Feedback Systems:
  Heuer, Pfeiffer, Schmidt

LbSync@FLASH

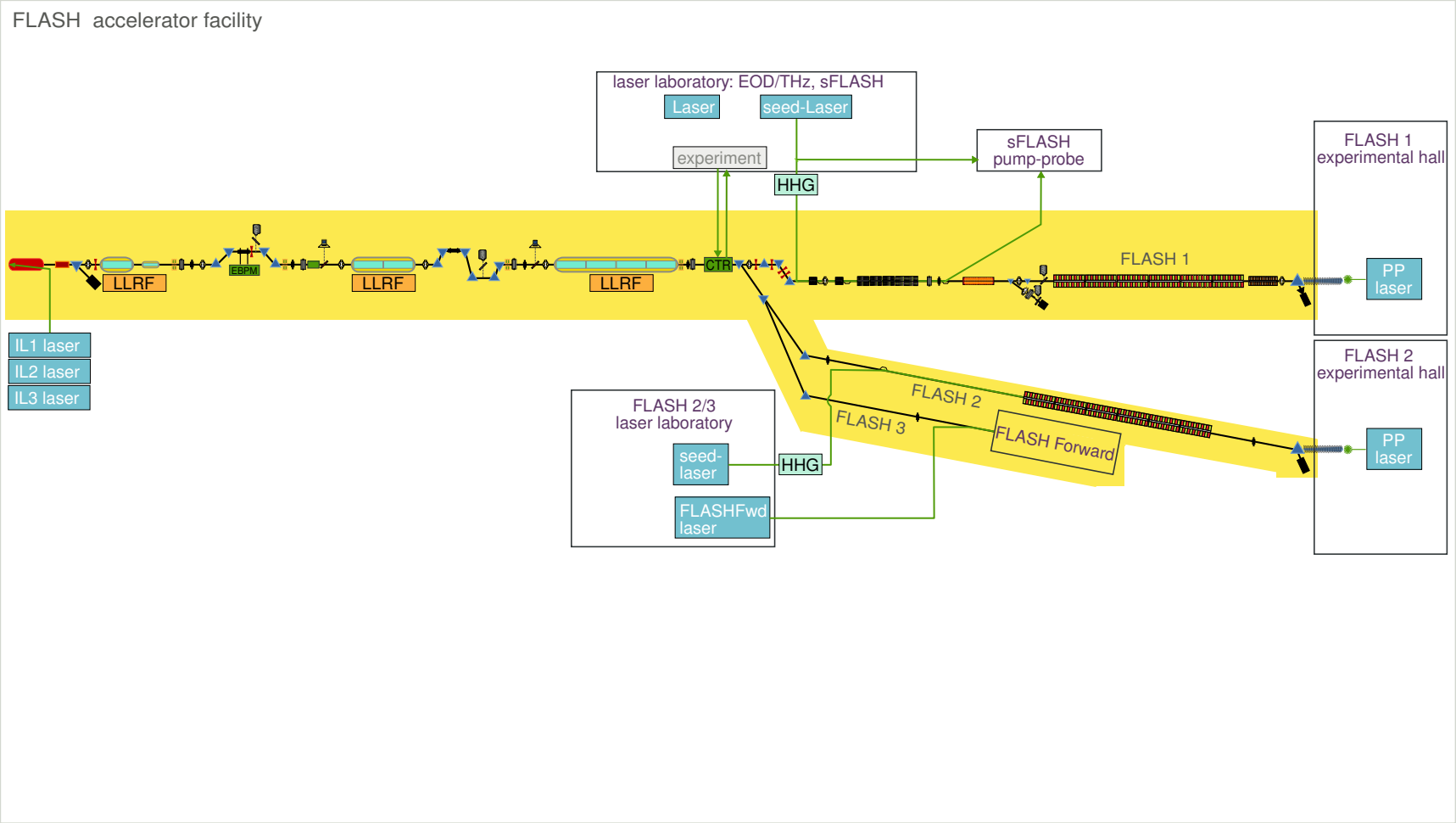

LbSync@FLASH

FLASH accelerator facility & laser-based synchronisation system

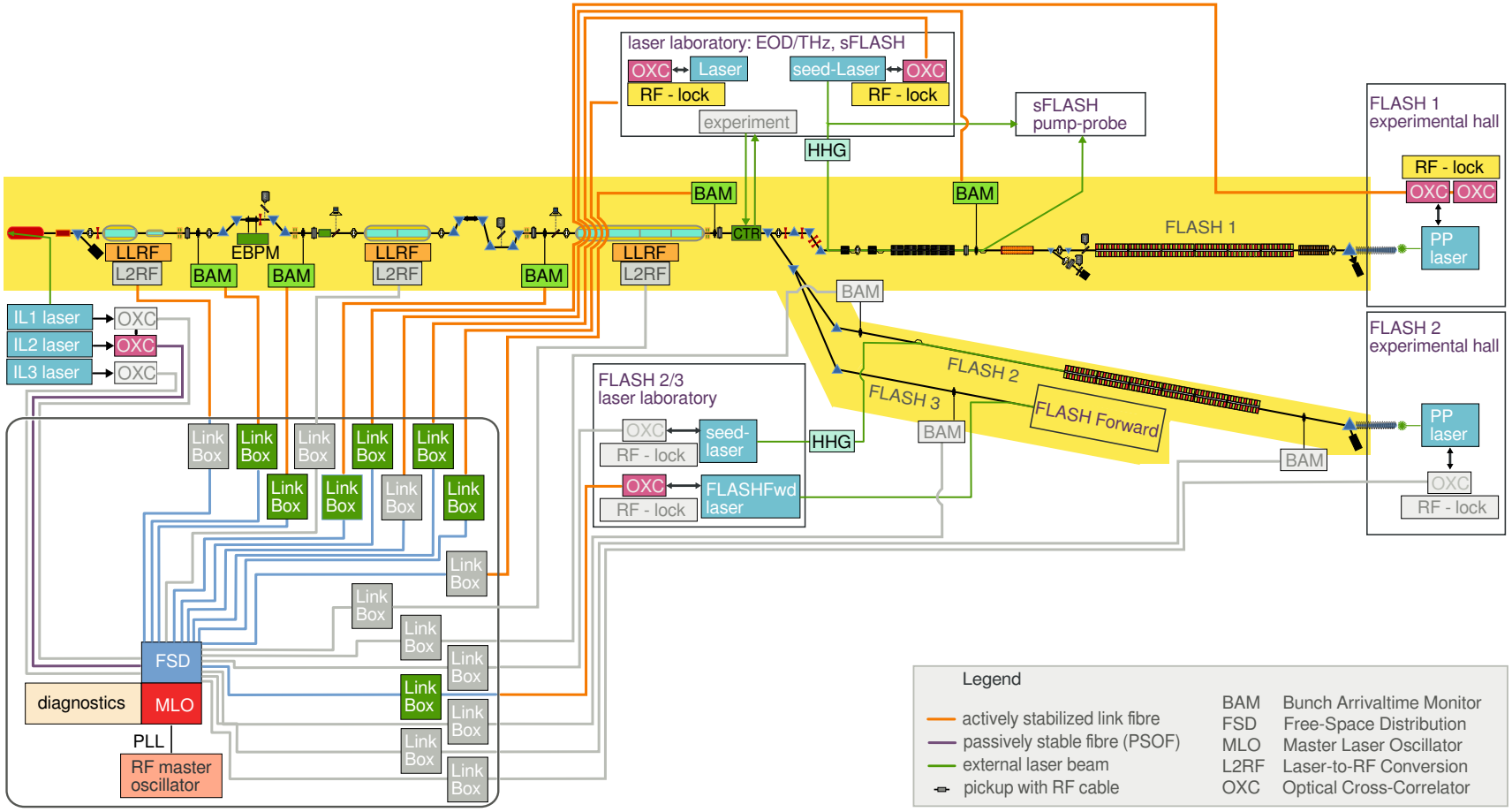

Optical Fiber Distribution

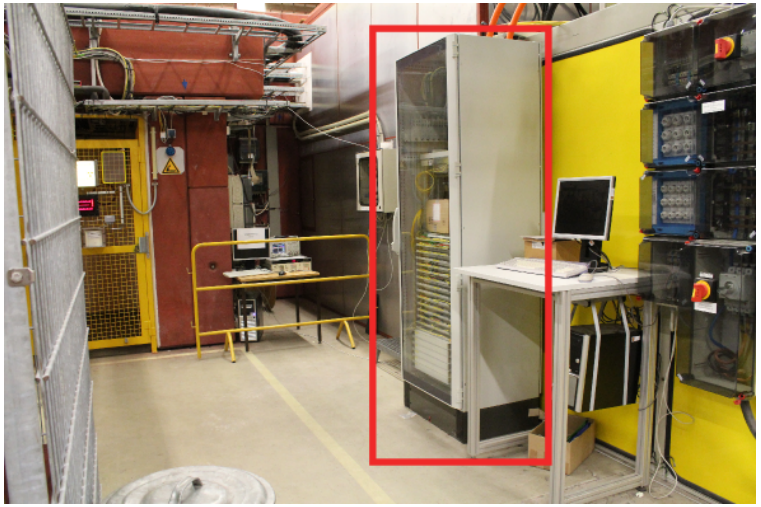

1. Synchronisation signals distributed via optical fibres :
   - Currently, 7 active links via Single-Mode Fibre (SMF-28e)
2. Infrastrure for Timing, MPS, Diagnostics ...
   - in total: 672 optical (SMF) p-2-p connections installed at FLASH
3. Upgrade of Synchronised Links (17+4 in total, but only space for 20)
   - started Jan.'16 : Installation of Polarisation-Maintaining Fibre (PMF)

Optical Fiber Distribution

FLASH 1

Patchfield	Rack (target)	No. of Cables	Required Length (m)	Comment
P1.ACC1	Tunnel, 12m : PF	1	44	**done**
P2.BC2	Tunnel, 21m : PF	**2**	2x 54	**done**
P3.ACC23	Tunnel, 49.5m : PF	1	94	**done**
P4.BC3	Tunnel, 76m : PF	1	107	**done**
P5a.KryoAnbau	KryoAnbau : LLRF Rack	1	169	continue JUN'16
P6.ACC7	Tunnel, 134m : PF	1	207	
P7.OCAS	28g, Rm.006 : Patchbox an Wand	1	234	
P8.ORS	Tunnel, 191m : PF	1	230	
P10.PP-Laser	28c, laser labor : PF (Box an Wand)	1	363	
		Total 10	**1556 m**	

FLASH 2

Patchfield	Rack (target)	No. of Cables	Required Length (m)	Comment
P11.SEED	(P12) 28m O1.005 (Technik Raum)	1	O(P12) = x + 326	
P12lab + P12.FLASHFwd	28M O2.005 (Laser Labor)	1	44 + 326	
P13.FL2EXTR	28m rack 02	**2**	2x 240	
P14.FL2BURN	28i rack 80	1	344	
P15a.FLPPL	... pending	1	? = O(P15c) ~473m	
	Sub-Total (Original Planning)	**6**	**(1194 + x) m, x = O(400m)**	
FEL beamlines / additional lasers	... pending	4	x m, x = 5x O(400m)	in NOV'16
		Total 10	**O(3200m)**	

Layout of the Free-Space Distribution (FSD)

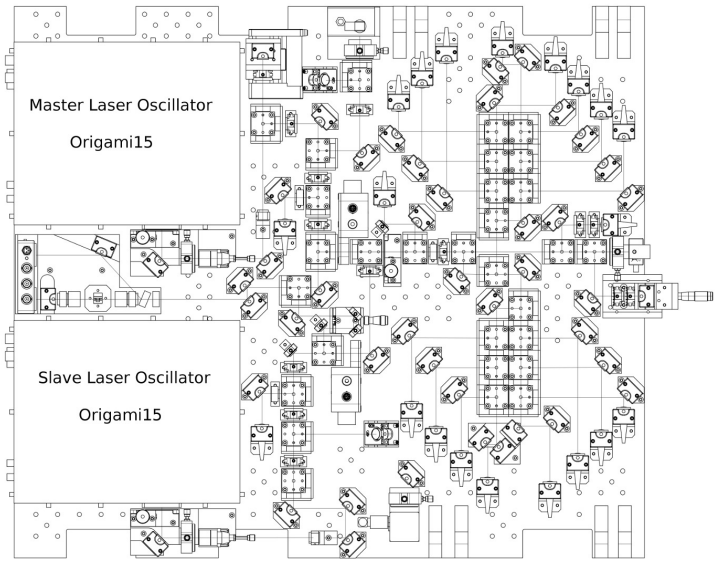

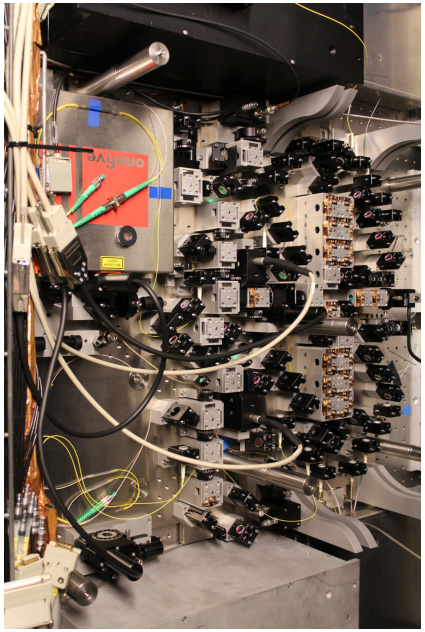

- 19 + 1 ports foreseen for individual stabilised fibre-links
  1. 8 : BAMs (3/8 in operation)
  2. 6 : Laser-2-Laser (OXC or RF)
  3. 3 : REFM-Opt (0/3) in opertion : 1st REFM-Opt in June/'16
  4. 2 : Active Links to FEL-Beamlines at FLASH2
  5. 1 : Spare
- 2 more links to lasers at FEL beamlines FLASH2 required : new concept needed
- in 2017: completely replace FSD optics for better drift stability

Link-Stabiliser Units (LSU)

- Optical Cross-Correlation (OXC) for detecting changes in transit time
- sensitivity typically $\leq 300\ \mathrm{as/mV}$
- regulation with $\leq 3\ \mathrm{kHz}$ BW & slow compensation of drifts
- reported out-of-loop timing jitter (for 300 m SMF link) $\leq 1\ \mathrm{fs}$ RMS
  Details: [Schulz et al.2013]

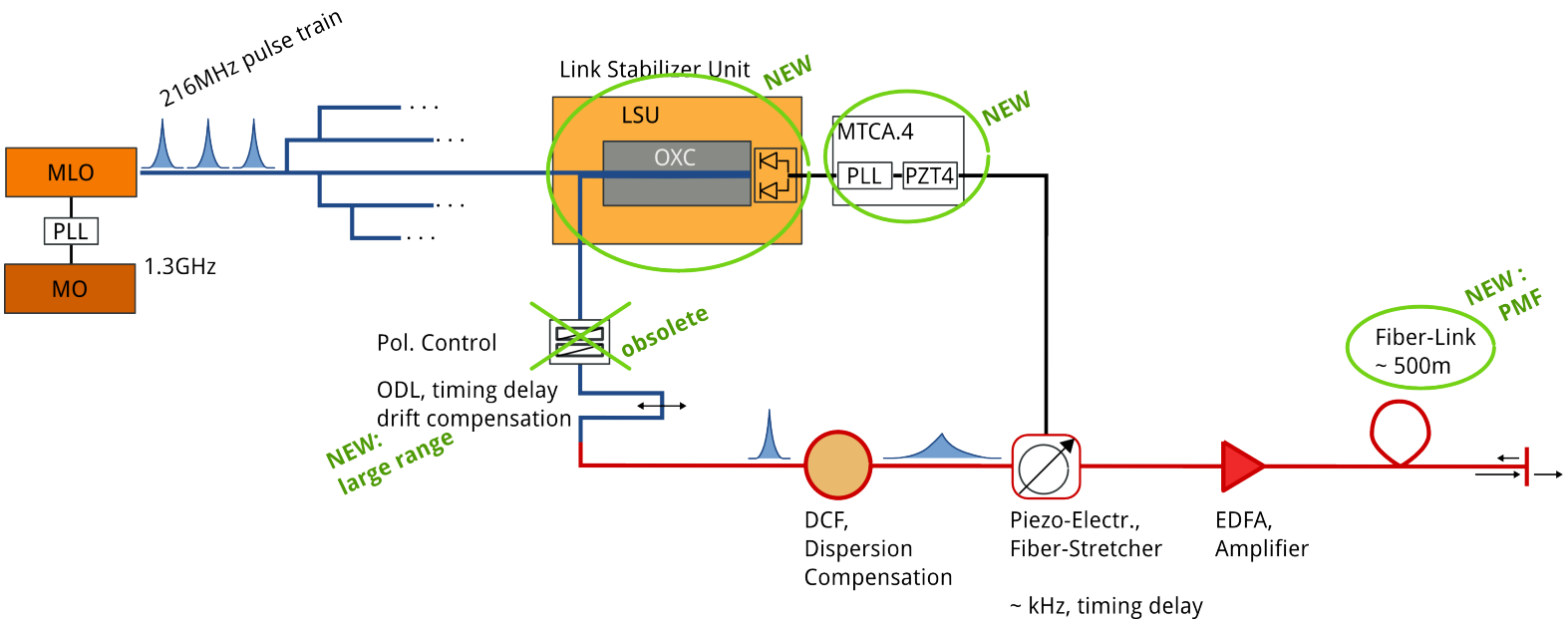

Link-Stabiliser Units (LSU)

- no more spare for VME & with MTCA.4 less space consumption
- up to 20 LSUs required : not enough space on table with old design
- better performance with new electronics
- change of optical components with Upgrade to PMF
- with PMF better drift performance : demonstrated (3600m link):
  Residual Drift ≤ 5 fs (rms) over 24h, i.e. improvement by more than factor 10.

For details contact : C.Sydlo.

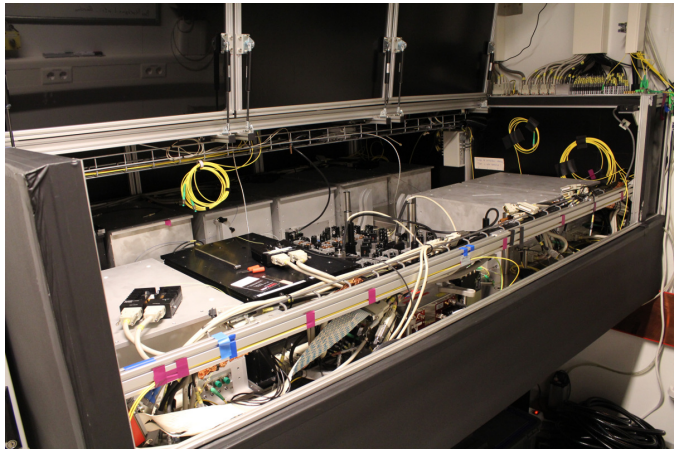

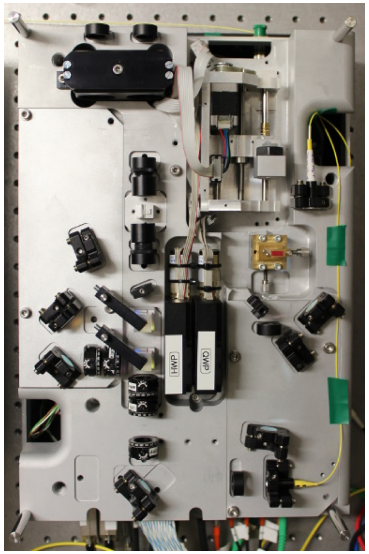

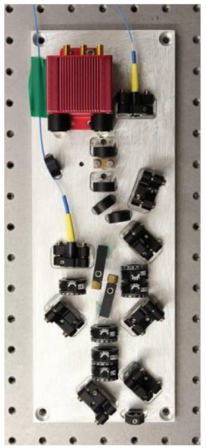

Link-Stabiliser Units (LSU)

Space allocation on optical table in sync.hutch/hall3

(shifted for better visibility; numbers in brackets mark potential space for vertical ODLs as long as FD-Boxes are still present)

1...16 = old numbering
1...20 = new numbering

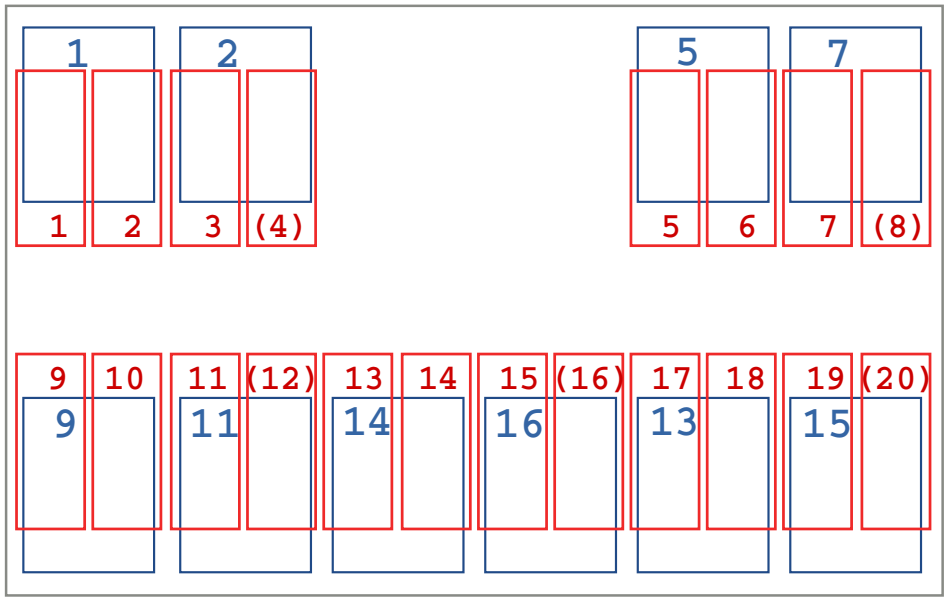

Electronics Upgrade in 2017

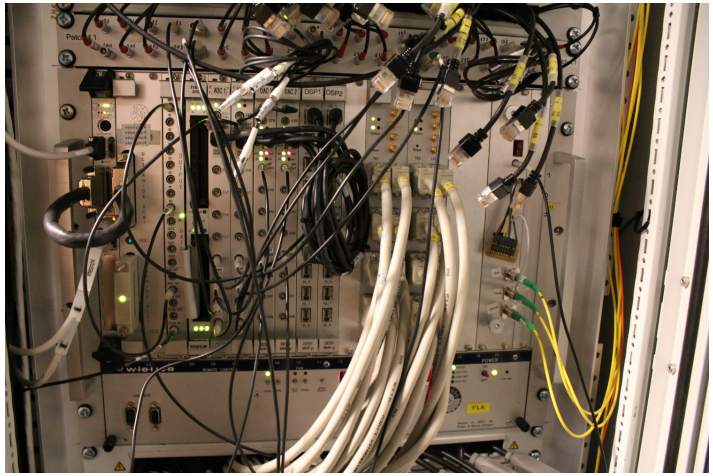

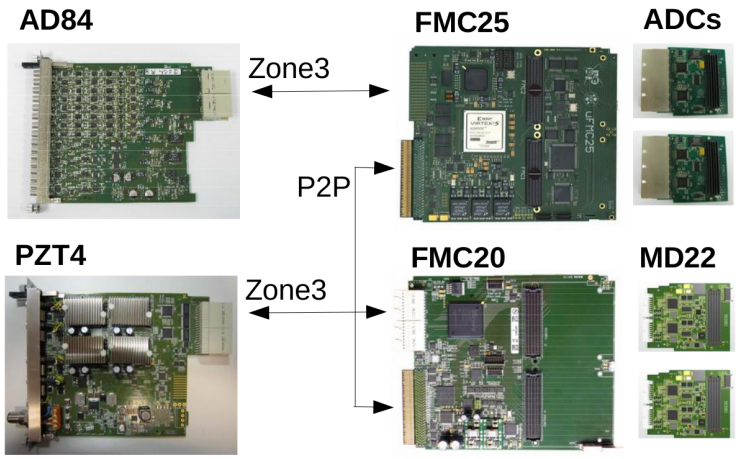

1. One MTCA.4 card set will handle 4 LSUs
2. Status boards : final revisions done & boards in production
3. Firmware development on-going:
   new, generalised FW concept for Laser & Link Lock
4. Server development in parallel:
   new generalised Server concept (based on control system independent libs); modular design
5. 1st complete set-up to be installed & comissioned at XFEL.

Ongoing Work at Various Client Systems

1. New RF-Resynchronisation at LLRF Rack GUN/ACC1/ACC39
2. Upgrades for Laser-to-Laser Synchronisation Setups at FLASH1/FLASH2/FLASHFwd
3. Progress on Bunch Arrival Time Monitors & Intra-Train Feedback

REFM-Opt: RF Re - Synchronisation

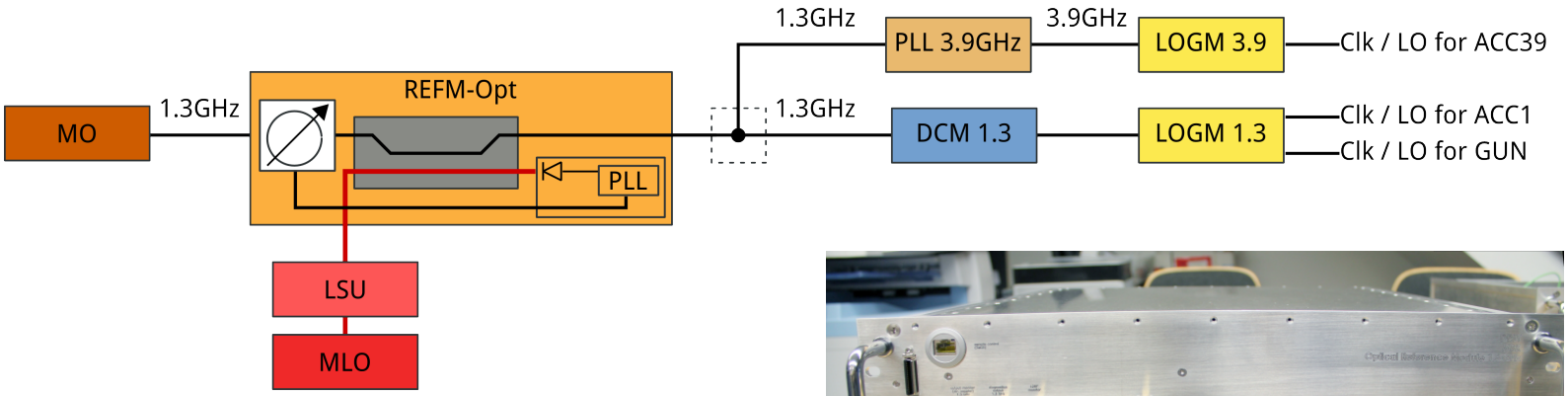

- optical reference module (REFM-Opt)
- balanced scheme with dual-output Electro-Optical Modulator (EOM)
- correcting phase drifts of 1.3 GHz signal by use of a VM (vector modulator) or phase shifter
- reported performance : 3.6fspeak-to-peak drift over 24h
  Details: [Lamb et al.2013] For details contact : Thorsten Lamb

- Installation in June (mini-shutdown) - optionally only as feedthrough box, depending on progress with Firmware development
- Jun'16: Comissioning of PMF link to REFM-Opt

Upgrades for Laser-2-Laser Synchronisation

1. OXC@Injector laser 1 : Installation Jun'16 or end '16
   - New IR-OXC with latest, engineered design + 4ns ODL
   - All infrastructure (electronics) are prepared
2. @FLASHFwd laser : on-going, installation of new OXC + new MTCA.4 electronics
3. @FLASH 1, 2nd Pump-Probe Ti:Sa-Laser : Planned for end '16, earliest
   - New OXC + new MTCA.4 electronics
   - Keep redundant VME system in parallel
4. @FLASH 2: Pump-Probe Laser, currently in Bldg.49, i.e. w/o synchronised link
   - New MTCA.4 electronics for RF-sync. + OXC, one for both PP Lasers (as in final setup)
   - Preparation on-going

For details contact : Jost Müller, Matthias Felber

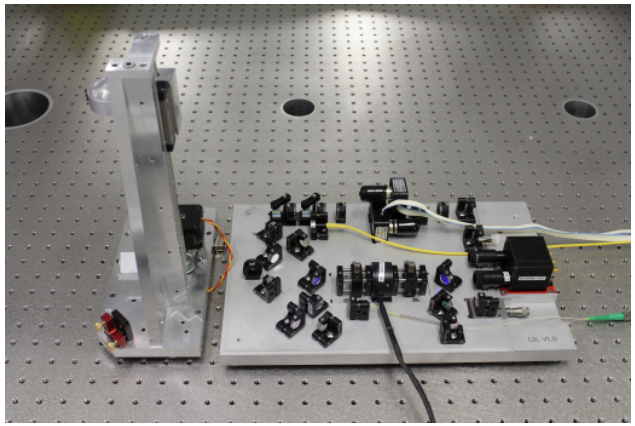

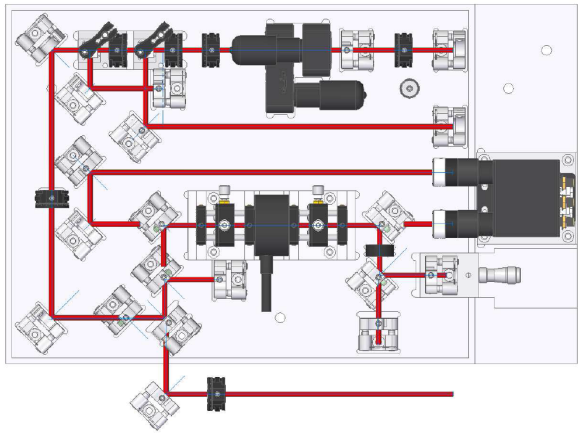

Bunch Arrival Time Monitors : Generation 3

1. new electro-optical unit ("BAM-box") :
   4U, 19-inch module with all electro-optics, RF parts, electronics
   8x boxes ready for FLASH in Aug/Sep.'16.
2. new RF-frontend : produced, tested & demonstrated usibility for down to 40 pC Details: [Czwalinna et al.2014]
3. new electronics for read-out & control
   - read-out electronics (dual FMC on MTCA.4): newest revision in production
   - very good progress on FW & server dev. (w/ DOOCS interface & GUIs)

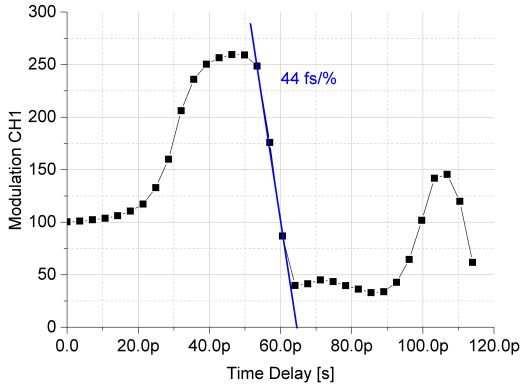

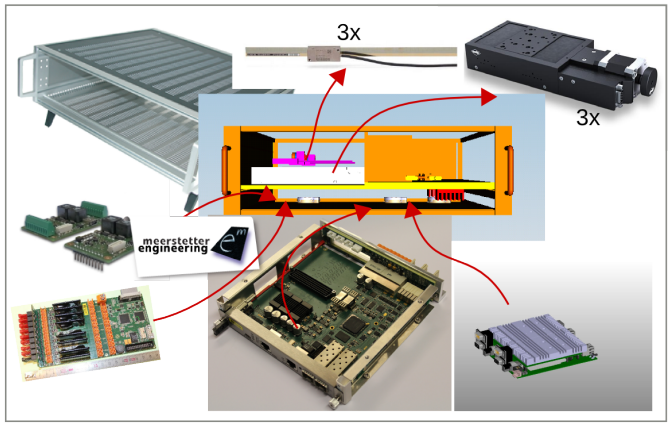

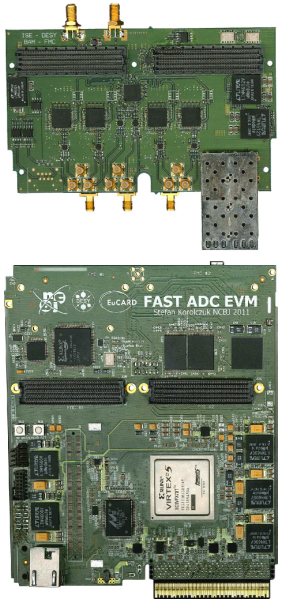

Bunch Arrival Time Monitors : Generation 3

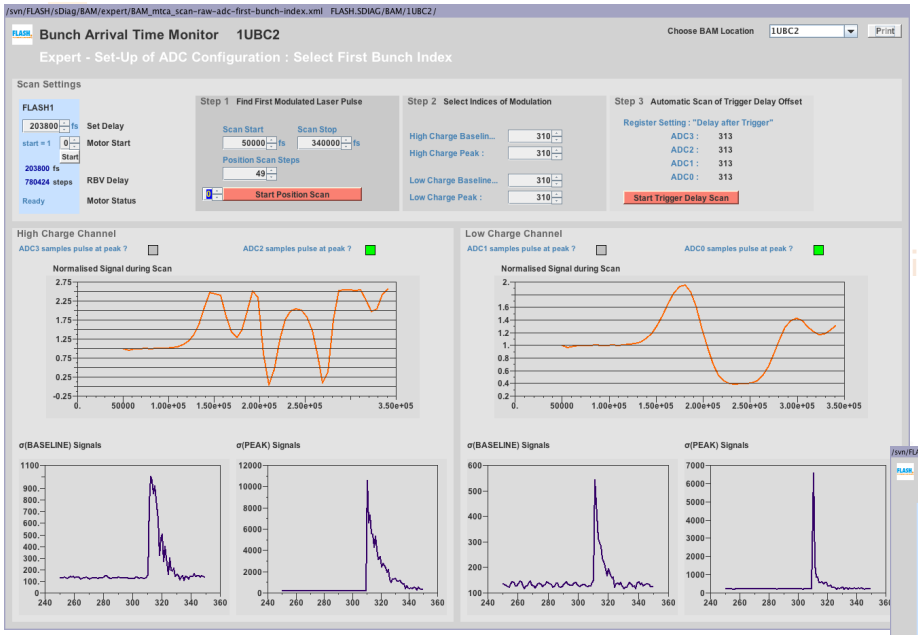

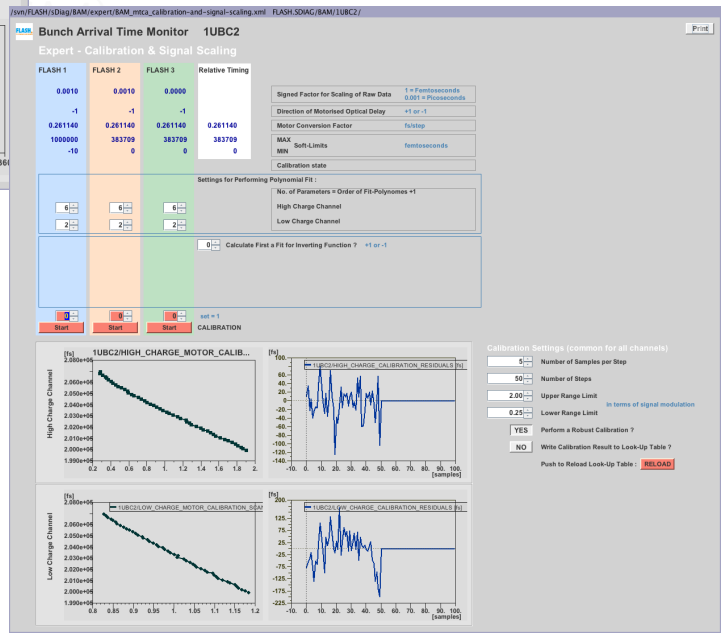

Revival of Intra-Train Feeback

Schematic of control loops for the **Fast**, Intra-Train RF feedback.
Set-Point Modulation w/ beam-based information:

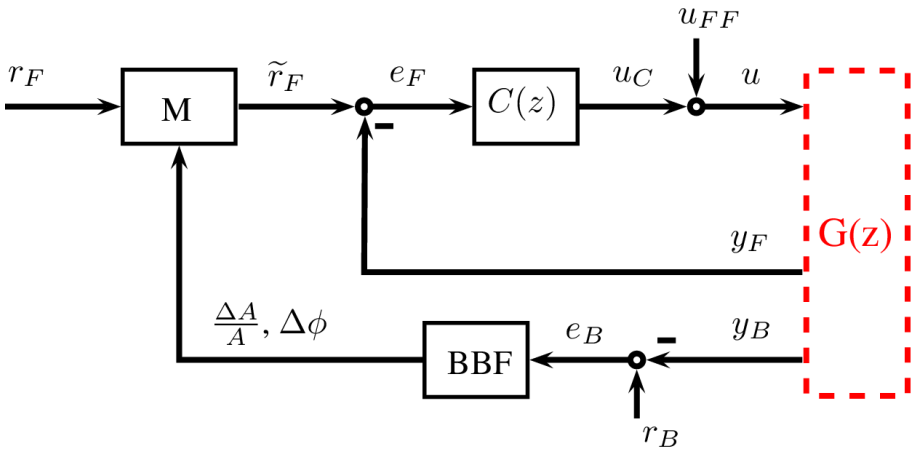

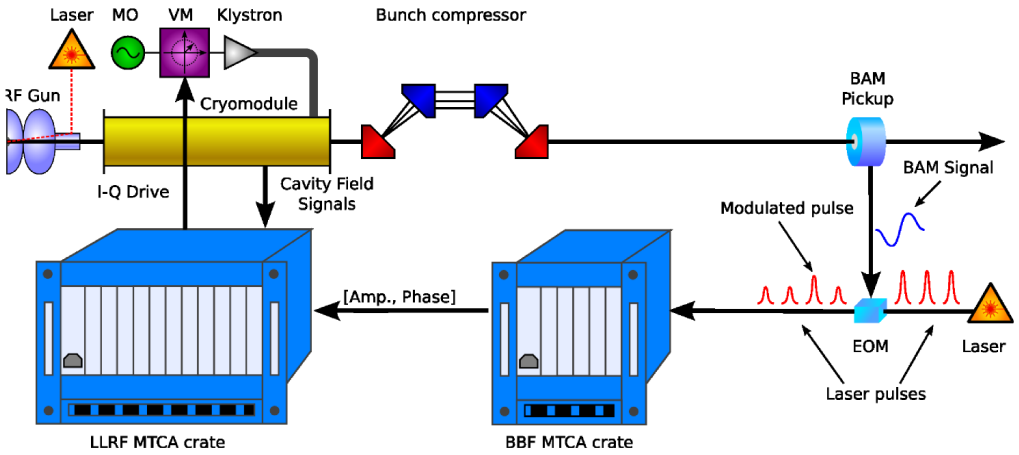

Revival of Intra-Train Feeback

Feedback on ACC1 using BAM.3DBC2 (on MTCA.4 electronics)
Out-of-loop monitor : BAM.4DBC3 : down to 25fs RMS (not optimised!)

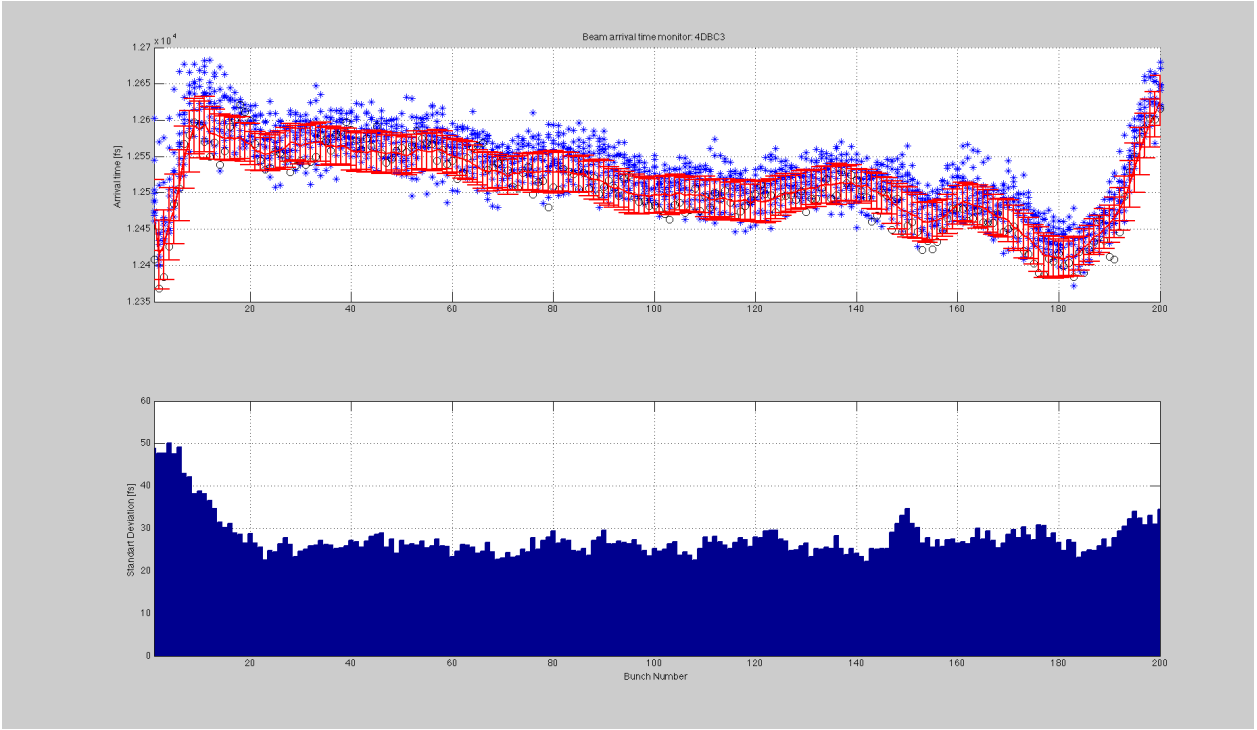

Goals for end of 2016/mid of 2017

- Continue PMF Installation (IT, IMD, Kellner-Telecom)
- Jun'16 : install REFM-Opt in ACC1 Rack
- by Jun/Jul'16:
  - BAM.1UBC2,3DBC2 & 4DBC3 permanently running on MTCA.4 system
  - intra-train FB tested with ACC1, later on ACC23
- end 2016 : BAM-Box
  - exchange of BAM.4DBC3 "BAM-Box" by new Gen.3 module
- in 2016: upgrades of Laser-2-laser systems
  - New OXC setups : Inj.Laser, PP-Laser, FLASHFwd
  - Laser-Locking electronics on MTCA.4 : PPLs for FLASH1&2
- beginning of 2017: comission 2x FL2-BAMs with complete new setup
  - RF Cabling (during shutdown Nov/Dec'16)
  - latest BAM-Box module (during shutdown Nov/Dec'16)
  - MTCA.4 electronics
- in 2017 : Sync.Lab
  - start to migrate to MTCA.4 & stand-alone electr. for laser & link locking
- in 2017: needs new cabling in Sync. Lab

[Czwalinna et al.2014] Czwalinna, M. K., Gerth, C., Schlarb, H., Sydlo, C., Angelovski, A., Jakoby, R., Penirschke, A., Weiland, T., Kuntzsch, M., and Gensch, M. (2014) , In *Proceedings of FEL 2014, Basel, Switzerland*

[Lamb et al.2013] Lamb, T., Czwalinna, M. K., Felber, M., Gerth, C., Schlarb, H., Schulz, S., Sydlo, C., Titberidze, M., Zummack, F., Janas, E., and Szewinski, J. (2013) , In *Proceedings of IBIC 2013, Oxford, UK*, pp. 447–450

[Schulz et al.2013] Schulz, S., Bousonville, M., Czwainna, M. K., Felber, M., Heuer, M., Lamb, T., Müller, J., Peier, P., Ruzin, S., Schlarb, H., Steffen, B., Sydlo, C., Zummack, F., Kozak, T., Predki, P., and Kuhl, A. (2013) , In *Proceedings of IBIC 2013, Oxford, UK*, pp. 753–756

Synchronisation Lab

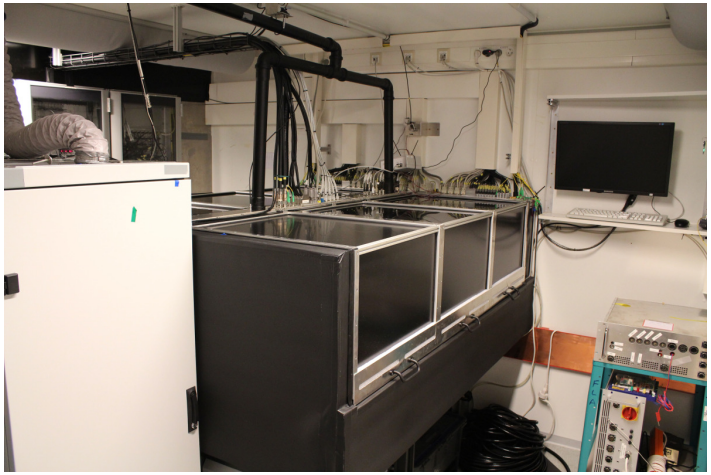

- concept for shielding: is crucial due to accoustics, vibrations & EMI:
  - copper ground & optical table resting on its own concrete fundament
  - cover for optical table: not sufficient for accoustic isolation
- temperature stabilisation: upgraded in 2010:
  - cover of optical table: "low-pass filter" for ambient temperature
  - stability on optical table: 30mK pk-to-pk
  - additional, actively stabilised rel. humidity: 2 % pk-to-pk
- mandatory effort because of coefficients of RF & optical cables:
  - 35 - 50 $\mathrm{fs/Km}$
  - 2 - 5 $\mathrm{fs/\%m}$

General Layout

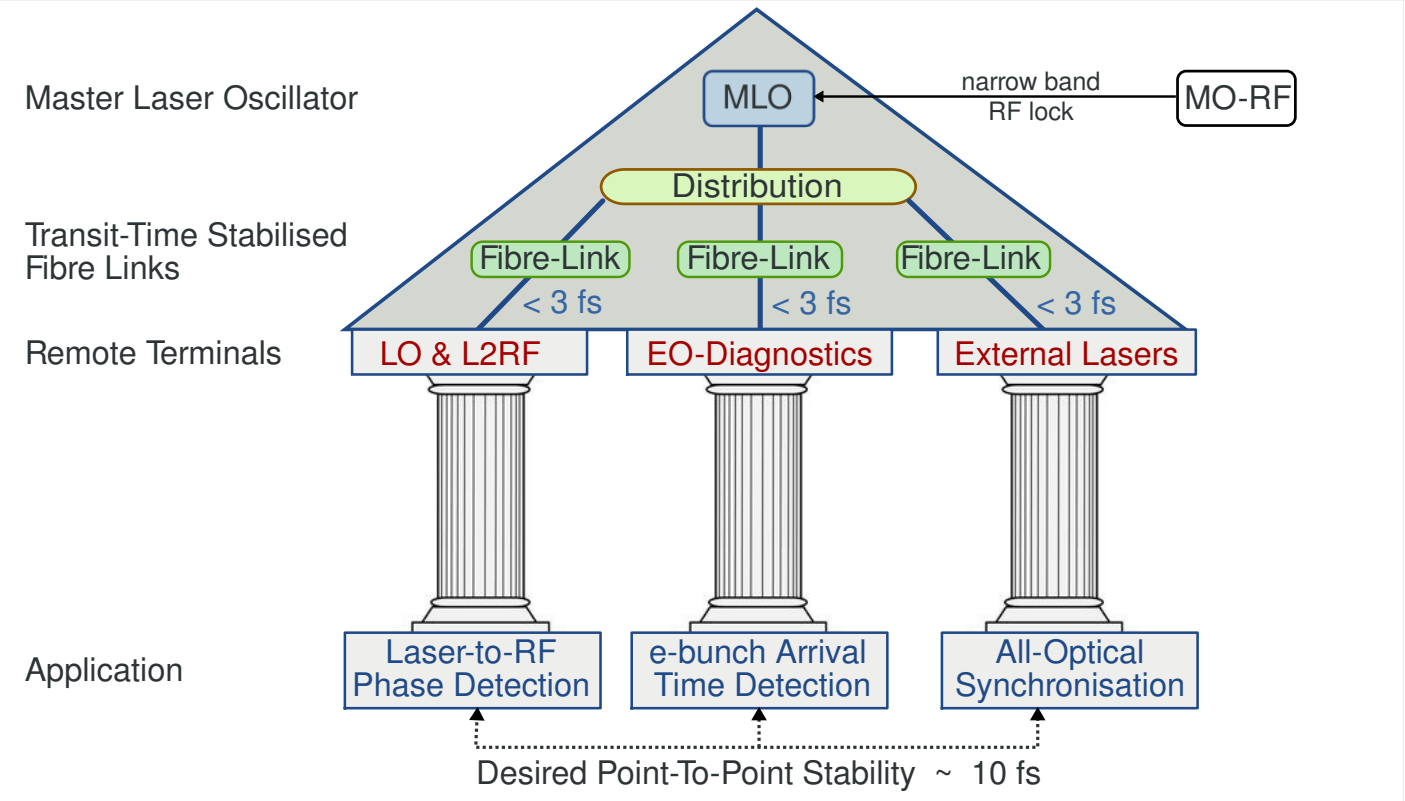

- master laser oscillator (MLO):
  - pulsed SESAM-based laser (Origami-15 from OneFive)
  - 200 fs pulses @ 216.667 MHz repetition rate
  - 1550 nm central wavelength (telecommunication standard)
- link stabilisation unit (Link Box)
  at end-station: out-of-loop jitter $\leq 1\ \mathrm{fs}$

Synchronisation of Pump-Probe Laser

- lately, upgraded and improved locking mechanism by firmware update
- server and firmware are capable of automatically finding locking position again after the low-jitter lock has been lost
- but, instabilities from laser oscillator can impede a stable locking state
  - OXC has high sensitivity, but small dynamic range
  - RF-Locking setup sensitive to EMI and vibration
- EMI problems in laser labs deteriorate the sycnhronisation performance
- lately, imense improvement of phase & amplitude noise of the TiSa oscillator
  - in turn, the jitter characteristic of the RF & lock improved by a factor of 2

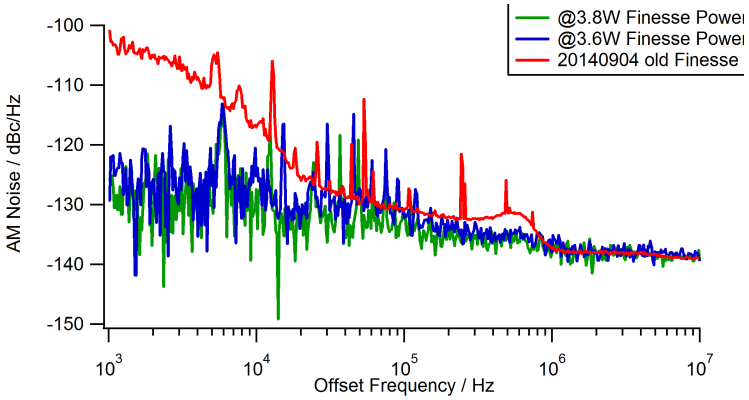

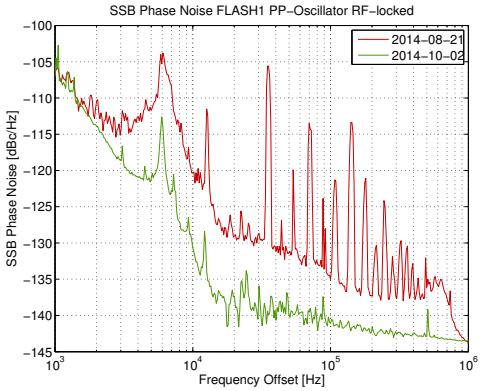

LRF Modules: RF Locking of External Lasers

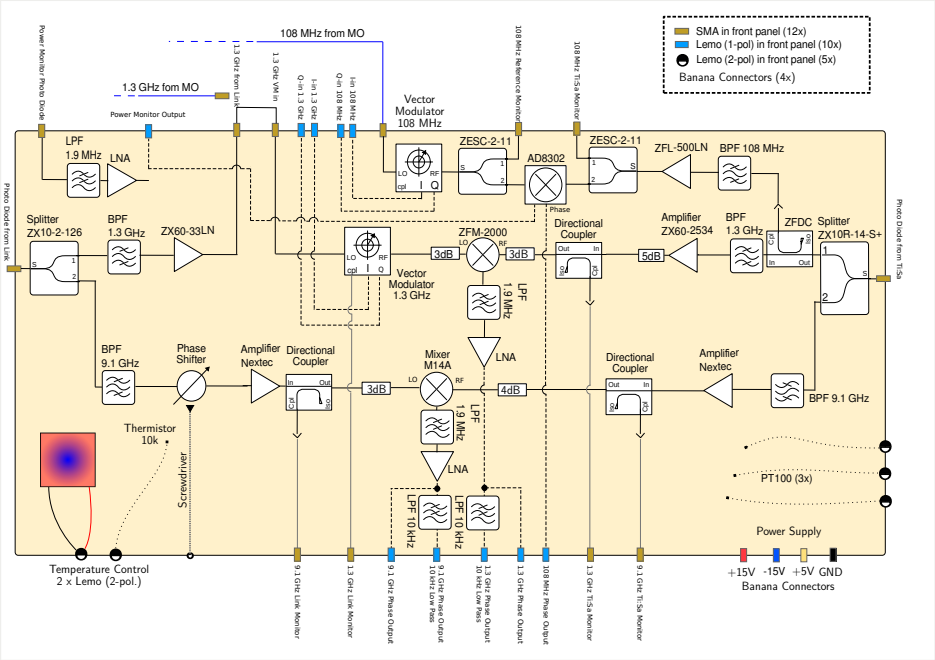

- RF-Lock Box setup:
  - Optical power monitoring
  - RF signal generation & phase comparison
- generation of RF signal from stabilised, optical pulse train
- phase comparison between converted RF and reference RF
- error signal to controller electronics (VME)
- RF-Locking of external laser :
  - cascaded loops: 108 MHz, 1.3 GHz, 9.1 GHz
  - low phase noise, high precision versus small dynamic range
  - stabilising repetition rate (cavity length) of the external laser oscillator

All-Optical: Optical Cross-Correlator (OXC)

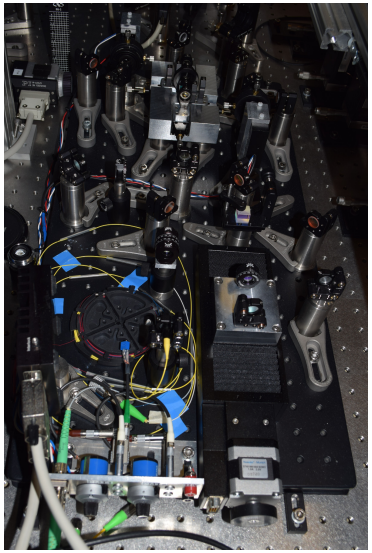

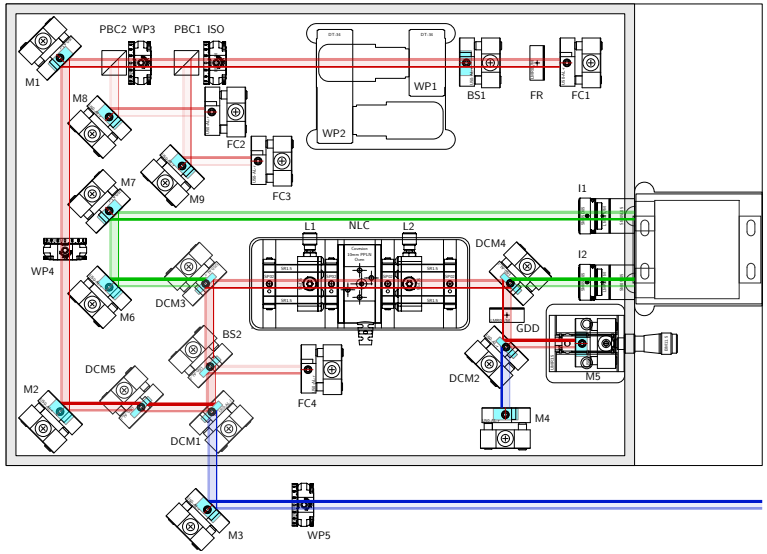

- two-color optical cross-correlation (sum or difference frequency generation), balanced detection scheme
- currently, still optical bread-board design
- engineered version in development
- sensitivity typically between 30 $\mathrm{mV/fs}$ and 5 $\mathrm{mV/fs}$
- slightly different setups installed at FLASH lasers:
  - Injector Laser 2 (IR)
  - Injector Laser 1 (UV) : in development
  - Seed Laser (28g)
  - Pump-Probe Laser (28c)